Living up to Life

Leica MICROSYSTEMS

User Manual

Leica TCS SP8
Leica TCS SP8 MP
Leica TCS SP8 X

Published by:

Leica Microsystems CMS GmbH
Am Friedensplatz 3
D-68165 Mannheim (Germany)

http://www.leica-microsystems.com
http://www.confocal-microscopy.com

Responsible for contents: Leica Microsystems CMS GmbH

Copyright © Leica Microsystems CMS GmbH.
All rights reserved.

Copyright

All rights to this document are held by Leica Microsystems CMS GmbH. Adaptation, translation and reproduction of text or illustrations (in whole or in part) by print, photocopy, microfilm or other method (including electronic systems) is not allowed without express written permission from Leica Microsystems CMS GmbH.

Programs such as LAS and LAS AF are protected by copyright laws. All rights reserved. Reproduction, adaptation or translation of these programs is prohibited without prior written permission from Leica Microsystems CMS GmbH.

AOBS® is a registered trademark of Leica Microsystems CMS GmbH.

This User Manual specifies names of products or services that are trademarks or registered trademarks of the respective trademark owners. Rather than including a trademark (TM or ®) symbol at every occurrence of a trademarked name, we state that we are using the names only in an editorial fashion, and to the benefit of the trademark owner, with no intention of infringement.

Made in Germany.

© Copyright Leica Microsystems CMS GmbH.

All rights reserved.

Contents

Copyright 3

Contents 5

1 About this User Manual 11

2 Intended Use 13

3 Liability and Warranty 15

3.1 Important Information for Operators and Users 15

4 Meaning of the warning messages in the manual 17

5 General Safety Notes 19

5.1 Commissioning and Use 19

5.2 Modifications to the System 19

5.3 Safety Devices and Safety Labels 20

5.4 Laser Safety 20

5.5 Electrical Safety 21

5.6 Contact with Liquids 22

5.7 Malfunction of the System 22

6 Additional Notes on Handling the System 23

6.1 Location 23

6.2 Using the Software 23

6.3 Protecting the System 24

6.3.1 Objectives 24

7 System Overview and Properties 25

7.1 TCS SP8 System Variants 25

7.1.1 TCS SP8 with Upright Microscope and Compact Supply Unit 25

7.1.2 TCS SP8 with Upright Microscope and Flexible Supply Unit 27

7.1.3 TCS SP8 with Inverted Microscope and Compact Supply Unit 28

7.1.4 TCS SP8 with Inverted Microscope and Flexible Supply Unit 29

7.2 TCS SP8 MP System Variants 30

7.2.1 TCS SP8 MP with DM6000 and IR Laser without Dispersion Compensation . . 30

7.2.2 TCS SP8 MP with DM6000 and IR Laser with Dispersion Compensation 31

7.2.3 TCS SP8 MP with DMI6000 and IR Laser without Dispersion Compensation . 32

7.2.4 TCS SP8 MP with DMI6000 and IR Laser with Dispersion Compensation 33

7.2.5 TCS SP8 MP with DMI6000 and InSight DeepSee laser 34

7.3 TCS SP8 X System Variants 36
7.3.1 TCS SP8 X with Upright Microscope 36
7.3.2 TCS SP8 X with Inverted Microscope 37
7.4 TCS SP8 with External UV laser 38
7.5 Controls on the Supply Unit 38
7.5.1 Main Switch Board on the Flexible Supply Unit 38
7.5.2 Control Panel Field on the Compact Supply Unit 39
7.6 Technical Data 40
7.6.1 Dimensions 40
7.6.2 Weight of the Supply Unit 40
7.6.3 Electrical Specifications 41
7.7 "Electromagnetic Compatibility" 41
7.8 Serial Number 42

8 Ambient Conditions 43
8.1 General Requirements Regarding Ambient Conditions 43
8.2 Vibrations 43
8.3 Room Dimensions 44
8.4 Electrical Connection Requirements 45
8.4.1 TCS SP8 with flexible supply unit 45
8.4.2 TCS SP8 with compact supply unit 45
8.4.3 TCS SP8 MP with flexible supply unit 46
8.4.4 TCS SP8 MP with compact supply unit 46
8.4.5 TCS SP8 X 46
8.4.6 External Lasers 47
8.5 Load capacity of the multiple socket outlet on the flexible supply unit 47
8.6 Waste Heat and Cooling 48
8.6.1 TCS SP8 with flexible supply unit 48
8.6.2 TCS SP8 with compact supply unit 49
8.6.3 TCS SP8 MP with flexible supply unit 49
8.6.4 TCS SP8 MP with compact supply unit 49
8.6.5 TCS SP8 X 50
8.6.6 External Lasers 50

9 Laser 51
9.1 Laser Classes 51
9.2 Overview of Usable Lasers 51
9.2.1 VIS/UV Lasers for TCS SP8 51
9.2.2 VIS/UV Lasers for TCS SP8 X 52
9.2.3 IR Lasers for TCS SP8 MP 52

9.2.3.1 Picosecond Laser 52
9.2.3.2 Femtosecond laser 53

10 Safety Features 55

10.1 Main Circuit Breaker for Disconnecting the Power Supply 55
10.1.1 Compact Supply Unit 55
10.1.2 Flexible Supply Unit 55
10.2 Key Switch 56
10.2.1 Master Key Switch on the Compact Supply Unit 56
10.2.2 Master Key Switch on the Flexible Supply Unit 56
10.2.3 Key Switch for the White Light Laser 57
10.2.4 Key Switch for UV Lasers 57
10.2.5 Key Switches for Other External Lasers 58
10.3 Emission Warning Indicators 58
10.3.1 Emission Warning Indicator on the Supply Unit 58
10.3.2 Emission Warning Indicator at the White Light Laser 59
10.3.3 Emission Warning Indicator on UV Lasers 59
10.3.4 Emission Warning Indicator on Other External Lasers 60
10.3.5 Malfunction of Emission Warning Indicator 60
10.4 Interlock Connectors 60
10.4.1 Interlock Connector on the Supply Unit 60
10.4.2 Interlock Connector on the White Light Laser 62
10.4.3 Interlock Connector on Other External Lasers 63
10.4.4 Interlock Connector on the Scan Head 63
10.5 Safety Switches on the Microscope 64
10.6 Warning Messages 64
10.7 Special Laser Safety Equipment 65
10.7.1 Laser Protection Tube and Laser Protection Shield 65
10.7.2 Safety Beam Guide on the TCS SP8 MP 66

11 Safety Labels on the System 67

11.1 Inverted microscope 68
11.2 Upright Microscope 70
11.3 Scan Head 72
11.4 Compact Supply Unit 74
11.5 Flexible Supply Unit 74
11.6 MP Beam Coupling Unit 75
11.7 Cover for replacement flange 76
11.8 Mirror Housing 77

11.9 White light laser 78
11.10 External UV Laser 78
11.11 Other External Lasers 79

12 Switching On the System 81
12.1 TCS SP8/SP8 X with Flexible Supply Unit 81
12.2 TCS SP8 with Compact Supply Unit 86
12.3 HyD Reflected Light Detectors (HyD RLDs) 91

13 LAS AF 93
13.1 Starting LAS AF 93
13.2 Structure of the Graphical User Interface 94
13.3 LAS AF Online Help 97
13.3.1 Structure of Online Help 97
13.3.2 Accessing Online Help 97
13.3.3 Selecting the Language for Online Help 98
13.3.4 Using Online Help 98
13.3.5 Full-text Search with Logically Connected Search Terms 99

14 Changing the Specimen 101
14.1 Changing the Specimen on an Upright Microscope 101
14.2 Changing the Specimen on an Inverted Microscope 101

15 Changing the Objective 103

16 Piezo Focus on Upright Microscope 105

17 Switching Off the System 107
17.1 TCS SP8/SP8 X with Flexible Supply Unit 107
17.2 TCS SP8 with Compact Supply Unit 113

18 Care and Cleaning 119
18.1 Cleaning Surfaces 119
18.2 Cleaning the Optical System 119
18.3 Cleaning Immersion Lenses 120
18.4 Care 120

19 Repairs and Service Work 121

20 Maintenance 123
20.1 Having Coolant Replaced 123

21 Disassembly and Transport 125

22 Disposal **127**

23 Contact **129**

24 Appendix **131**

24.1 Patents 131

24.2 Safety Data Sheets from Third-Party Manufacturers 131

24.3 Compliance 137

24.4 People's Republic of China 139

1 About this User Manual

Prior to commissioning the system, carefully read through this User Manual and be absolutely certain to follow the safety notes contained in it. So that you can operate the system safely and react quickly and correctly in the event of an emergency, you must familiarize yourself with the safety devices before using it for the first time. In this case, read **Chapter "Safety Features"** in this manual. Keep this User Manual and the included manuals for the microscope and other components in a safe place easily accessible for all users.

This Manual gives you important information about safe handling of the system. All information is intended for the safety of users and trouble-free operation of the system. Unless the information pertains specifically to certain system variants, the instructions always apply to the basic system described here.

This User Manual provides you with important information for using the system, the necessary ambient conditions and the usable lasers. It explains system startup. The system is assembled and disassembled by service technicians that have been authorized by Leica Microsystems CMS GmbH. This is why unpacking, assembly and installation of the system are not described in this manual. You can find an overview of the system and specifications in the **Chapter "System Overview and Properties"**. For information about special configurations, such as optional lasers or specific objectives, refer to the respective included manual.

This User Manual does not contain any information about basic optical principles or the operating principle of microscopes, confocal systems and the like. If you are interested in these topics or certain applications from the area of optics and confocal microscopy, you can read more about them at the Leica Microsystems CMS GmbH knowledge portal: http://www.leica-microsystems.com/science-lab/

The system is delivered with the latest version of the licensed "Leica Application Suite Advanced Fluorescence" (LAS AF) software. In order to keep information up-to-date, a description of software functions has been intentionally omitted from this user manual. You can find up-to-date explanations and instructions for corresponding software functions in the LAS AF Online Help. Read **Chapter "LAS AF"** in this User Manual in order to familiarize yourself with the design and basic operation of the software. Additional information about specific functions can be found in the online help.

The instructions contained in this documentation reflect state-of-the-art technology and knowledge standards at the time of publication. Leica Microsystems CMS GmbH reserves the right to revise this documentation and/or to further develop and improve the products described in this document at any time without prior notice or any other obligation.

If you have any suggestions or improvements for this User Manual, please contact the Leica branch office in your country.

2 Intended Use

This system is intended for use in a lab. The system was designed for confocal scanning (laser scanning images) of fluorescence-marked living and fixed specimens as well as for quantitative measurements in the area of life science.

Applications of in-vitro diagnostics in accordance with MPG (German Medical Devices Act) are excluded from proper intended use.

This system must not be used together with life-support systems such as those found in intensive-care wards.

The owner/operator and user of this product are responsible for proper and safe operation and safe maintenance of the system and for following all applicable safety regulations. The owner/operator and user are fully liable for all consequences resulting from the use of the system for any purposes other than those listed in the User Manual or the online help.

The manufacturer assumes no liability for damage caused by, or any risks arising from, use of the microscopes for purposes other than those for which they are intended, or not using the microscopes within the specifications of Leica Microsystems CMS GmbH. In such cases, the Declaration of Conformity shall be invalid.

3 Liability and Warranty

Leica Microsystems CMS GmbH shall not be liable for damages resulting from failure to observe the information in this User Manual. The information here does not in any way modify the warranty and liability clauses contained in the general terms and conditions of Leica Microsystems CMS GmbH.

Repairs and servicing may be performed only by service technicians authorized by Leica Microsystems CMS GmbH. Opening or working on the system in any way shall void any and all warranty claims.

The manufacturer assumes no liability for damage caused by, or any risks arising from, use of the microscopes for purposes other than those for which they are intended, or not using the microscopes within the specifications of Leica Microsystems CMS GmbH. In such cases, the Declaration of Conformity shall be invalid.

Leica Microsystems CMS GmbH shall not be liable for any damage caused by incorrect storage, improper transport or an unsuitable installation location.

Figures are for illustration purposes. The system you purchased can deviate from the illustrations without Leica Microsystems CMS GmbH explicitly specifying such.

Leica Microsystems CMS GmbH shall not be liable for any injury or property damage caused by untrained or unauthorized persons.

3.1 Important Information for Operators and Users

- The owner/operator is required to designate a Laser Safety Officer or a Laser Protection Advisor according to the applicable legal requirements in each country.
- The owner/operator and user of this product are responsible for proper and safe operation and safe maintenance of the system and for following all applicable safety regulations.
- The owner/operator and user are fully liable for all consequences resulting from the use of the system for any purposes other than those listed in the User Manual or the online help.
- The owner/operator and user are obligated to perform and monitor suitable safety measures (according to national regulations).
- The owner/operator and user are responsible for observing the laser safety regulations according to applicable country-specific regulations.
- The owner/operator and user must ensure that this laser product is commissioned and operated only by persons who have been trained in the use of the system and the potential dangers of laser radiation.
- The owner/operator and user are fully liable for all consequences resulting from the use of the system if it is opened, improperly serviced or repaired by persons other than authorized Leica service representatives.

4 Meaning of the warning messages in the manual

WARNING	**Electric shock** This warns you of hazardous electrical voltage. Following the instructions is mandatory, since otherwise there is a risk of severe or fatal injury.

WARNING	**Severe injuries from ...** This note warns you of hazards that can cause severe or fatal injuries.

WARNING	**Permanent eye and skin damage from laser radiation** This note warns you of eye and skin damage that can occur when using lasers if safety precautions are not taken.

WARNING	**Risk of injuries due to harmful or irritating substances** This note warns you of substances that pose a health hazard.

WARNING	**Risk of injuries due to biological substances** This note warns you of biological substances that pose a health hazard.

WARNING	**Risk of burns on hot surfaces** This note warns you of hot surfaces that can cause burns.

CAUTION	**Injuries from…** This note warns you of minor to moderate injuries that can be prevented by following instructions.

NOTICE	**Risk of damage to the system** This note describes possible material damage that can occur in case of misuse.

NOTICE	**Loss of data** This note warns you of the potential for losing data.

	Observe user manual This mandatory sign indicates that an additional user manual must be followed.

	Wear laser safety glasses This mandatory sign indicates that laser safety glasses must be worn to prevent eye injuries.

	Additional note This note serves to emphasize important instructions for handling the product or contains special instructions about a certain topic.

5 General Safety Notes

You have to follow the instructions listed below to work with the instrument safely and without disturbance. If you do not follow these or other instructions in this User Manual or the included manual, Leica Microsystems CMS GmbH shall not be liable for any resulting injury or property damage.

As it is impossible to anticipate every potential hazard, please be careful and apply common sense when using the system.

5.1 Commissioning and Use

- The system components have been packaged securely for transport in multiple crates. Do not open these crates. The crates may be opened and unpacked by Leica service technicians or by people who are authorized by Leica Microsystems CMS GmbH only.
- The system may only be set up by Leica service technicians or by people who are authorized by Leica Microsystems CMS GmbH.
- This laser equipment may be operated only by persons who have been trained in the use of the system and about the potential hazards of laser radiation.
- Have your laser safety officer instruct you about the dangers of laser radiation and about suitable laser safety precautions, such as wearing suitable laser safety glasses. This applies to all persons present in the room where the system is set up and operated.
- Each user must have read the instructions included and follow the instructions it contains.
- Do not introduce any flammable objects, such as paper, into the specimen area when you are working with a laser.
- Do not place any flammable or combustible objects on or near the system and do not put it near hot surfaces.
- During start up and during operation, you have to keep your hands and fingers away from the specimen area, as otherwise there is a risk of crushing hazards or injury from rotating objectives and the motorized specimen stage.
- Set up the workplace (for example, chair and monitor) on the system so that it corresponds to your requirements. Observe the national regulations for occupational safety.
- Before each service call by a service technician or whenever you relocate the instrument, you have to clean it thoroughly. This is necessary to remove any possible contamination, thereby preventing the transfer of dangerous substances and pathogens and avoiding hazards and dangers. The same also applies to the removal of components. This applies in particular to systems that are located in biomedical research labs.
- You must not deviate from the operating and maintenance instructions provided herein.

5.2 Modifications to the System

- The system is installed by service technicians from Leica Microsystems CMS GmbH. You must not change the position of the system components.

- The supply unit must always be set up and operated in an upright position.
- Under no circumstances may you open housing parts.
- Never disconnect a fiber optic cable.
- The cable and fiber optic cable may not be folded, stretched, pinched or rolled up tightly or damaged in any other way.
- The product has a closed liquid coolant circuit. The cooling liquid hoses may not be folded, stretched, pinched or rolled up tightly or damaged in any other way.
- Do not connect any external equipment or other components. If you have questions, please directly contact the Leica branch office in your country.

5.3 Safety Devices and Safety Labels

- So that you can operate the system safely and react quickly and correctly in the event of an emergency, you must familiarize yourself with the safety devices before using it for the first time. Read **Chapter "Safety Features"** of this User Manual carefully.
- Never remove the safety devices on the system.
- Never deactivate the laser protection devices.
- All safety devices must be ready to operate. Do not carry out any procedures that modify, disable or damage the functionality of safety features. Unauthorized procedures could result in serious injuries or property damage.
- Safety labels on the system may not be removed. Missing or damaged safety labels must be attached immediately and at the described location. Observe **Chapter "Safety Labels on the System"**.

5.4 Laser Safety

- The instrument is a Class 3B/IIIb (VIS and UV lasers) or a Class 4/IV (IR lasers) laser product.
- You must observe all suitable safety measures applicable for this laser class.
- When using an MP system, you must wear laser safety glasses (Order No.: 158002570). Appropriate laser safety glasses for IR laser radiation are provided with the system when delivered. During the scanning operation, all persons present in the room must wear such laser safety glasses. These laser safety glasses do not provide any protection against visible laser radiation (visible spectrum)!
- It is not necessary to wear protective eyewear when using VIS and UV lasers. When used as intended and safety notes have been followed, laser radiation is kept within the limit value that eliminates the chance for eye injuries.
- Never look directly into a laser beam or a reflection of the laser beam. Avoid all contact with the laser beam.
- Never expose your eyes or skin to direct or indirect laser radiation. The radiation can cause irreparable eye and skin injuries.
- During the scanning operation, the laser radiation is accessible in the microscope's specimen area without obstruction after coming out of the objective. Always maintain a

nominal ocular hazard distance of at least 20 cm (8") between your eyes and the opening of the objective.

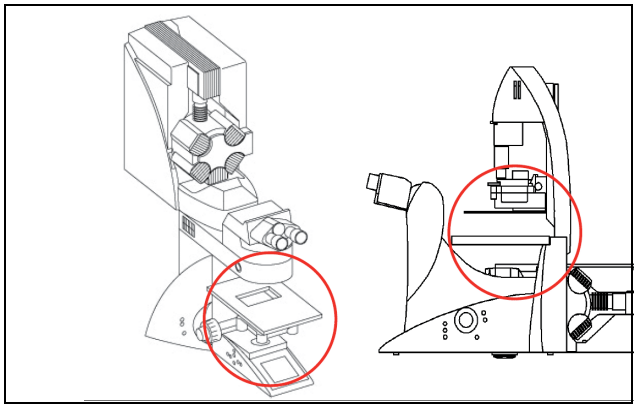

Figure 1: Specimen area of upright and inverted microscope

- Make sure that the fiber optic cables are not damaged. The system may not be turned on with damaged fiber optic cables, as laser radiation can escape and lead to irreparable eye and skin injuries.
- It is not necessary to wear protective eyewear when using VIS and UV systems. When used as intended and safety notes have been followed, laser radiation is kept within the limit value that eliminates the chance for eye injuries.
- Do not use an S70 microscope condenser. The large working distance and the low numerical aperture of the S70 microscope condenser could result in a hazard from laser radiation.
- Only use S1 and S28 Leica microscope condensers.
- Do not look into the eyepieces during the scanning operation.
- Never change samples during a scanning operation.
- Never change objectives, filter cubes, beam splitters, condensers or other components during a scanning operation.
- Do not look into the eyepieces when switching the beam path in the microscope.
- Do not introduce any reflective objects or mirrors into the laser beam path or into the specimen area.
- If there is no lamp housing or mirror housing connected to the microscope, attach the cover to the replacement flange.
- All unoccupied positions in the objective nosepiece must be closed using the supplied caps.
- For MP systems, dry objectives (air objectives) may not be used with a numerical aperture (NA) larger than 0.85. This does not apply to immersion objectives (oil, water).

5.5 Electrical Safety

- This system is designed for connection to grounded (earthed) outlets. The grounding plug performs an important safety function. To avoid the risk of electrical shock or damage to the instrument, do not disable this feature. Operation without grounded sockets is not permitted.

- Make sure that the supply voltage at the system remains in an approved tolerance range (100 V~ - 240 V~ ±10%).
- The system may be connected to a power supply with ground protection conductor only! Do not interfere with the grounding function by using an extension cord without a ground wire. Any interruption of the ground wire inside or outside of the system, or release of the ground wire connection, can cause the system to become hazardous. Intentionally disconnecting the ground protection conductor is not permitted.
- Before any cleaning or servicing, de-energize the entire system. To do so, use the power switches of all components and disconnect all power cables from the power supply.
- Only use the power cable included or provided by your local Leica service technicians for connecting individual peripheral devices to the power supply.
- Fuses inside the system may be replaced only by authorized Leica service employees. If you have any further questions, please directly contact the Leica branch office in your country.

5.6 Contact with Liquids

- To avoid the risk of electrical shock and fire hazards, never expose the system to rain or moisture.
- Do not allow any liquid to enter the system housing or come into contact with any electrical components.
- Avoid condensation.
- The system must be completely dry before connecting it to the power supply or turning it on.
- Do not operate the system if coolant is leaking or has leaked.

5.7 Malfunction of the System

You must immediately disconnect the system from the power supply if any of the following occur:

- The emission warning indicator is not lit after being switched on using the detachable-key switch.
- The indicator continues to be lit after being switched off using the keyswitch
- Scanning of the specimen is not activated after being switched on properly (laser radiation in the specimen area).

If any of these occur, immediately notify the Leica branch office in your country or your local contact person.

6 Additional Notes on Handling the System

Follow these instructions to ensure that you handle the system without interference to avoid damage to the instrument and loss of data.

6.1 Location

- You need sufficient space for temporary storage and for unpacking the delivered components. Always protect the transport crates and their contents from moisture and condensation and store them facing upwards (see the indication on the crate).
- Upon receiving the crates, make sure they are intact. If you find that the crates or seals have been damaged, have the supplier confirm this; inform your contact person at Leica Microsystems about this immediately.
- Keep the packaging material in case you need to return a defective component.
- Be absolutely certain to observe the ambient conditions applicable for this system.
- You may use the system indoors only.
- The room must be free of dust, oil and chemical vapors.
- After installing the system, you may carry out interior finish work on the room only if the system is stored in a dust-free location while this work is underway.
- Avoid direct sunlight and vibrations, since these can distort measurements and micrographic scans.
- We recommend using a room that can be completely darkened.
- Do not expose the system to drafts.
- If the system has to be moved to a new location for any reason, contact the Leica branch office in your country.

6.2 Using the Software

- Before carrying out operating steps with the system, first read the corresponding description of the function in LAS AF Online Help. For an overview of the individual functions, refer to the table of contents of the online help.
- Back up your data regularly to a suitable data carrier.
- Do not install any hardware or software on the workstation, as otherwise serious damage to the system or loss of data can result.
- Do not switch the workstation off after a software crash, but restart the LAS AF software after 15 seconds. No image data are lost in case of a software crash. If the LAS AF software is restarted without restarting the workstation, the data are automatically restored. If the software crash is caused by a crash of the workstation, the image data will be lost.

6.3 Protecting the System

- Observe the maintenance instructions and intervals prescribed in the **Chapter "Maintenance"**.
- During the update of the firmware, a continuous tone sounds. After the updated component is automatically restarted, the signal stops. During the automatic update and the automatic restart of the component, you may not switch off or restart the system, since otherwise this can lead to damage to the system.
- Protect the system from dust and grease.
- Make sure to use only one small drop of immersion fluid. The immersion fluid may not contaminate or enter the microscope.
- Make sure that the specimen carrier is not against the objective and cannot be damaged by it or cause broken glass.
- Be absolutely certain to prevent the optics and mechanical parts from coming into direct contact with acids, bases and other aggressive chemicals.
- Never use abrasive products to clean the system and its components. Abrasives can scratch the surface and thus have a negative effect on the protection of the parts.
- Protect the microscope from excessive temperature fluctuations. Such fluctuations can lead to the accumulation of condensation, which can damage the electrical and optical components.
- Allow the entire system to cool down to room temperature before covering the system with a dust cover. This prevents condensation from forming below it, which can enter the system and damage it.
- When used as intended, the HyD reflected light detectors are sufficiently protected from destruction due to overexposure by measures in LAS AF and by an electronic protective circuit. An audible signal (beep) warns the user if the detector is being operated near the maximum permitted signal level. If the maximum permitted signal level is exceeded, the detector automatically switches off and the red status LED on the detector module (see **Chapter 12.3**, **Figure 79, item 2**) lights up.
- If you have any further questions, please directly contact the Leica branch office in your country (see **Chapter "Contact"**).

6.3.1 Objectives

- Only use immersion fluids that are intended for the objective. Unsuitable immersion fluid can contaminate or destroy the objective.
- When changing over from an oil or water objective to a dry objective, you have to remove the immersion medium from the specimen slide in order not to damage the dry objective.
- Never open the objectives for cleaning.
- If there is a piezo focus installed on your system, be absolutely certain to observe the corresponding notes in **Chapter "Using a Piezo Focus"**.

7 System Overview and Properties

7.1 TCS SP8 System Variants

7.1.1 TCS SP8 with Upright Microscope and Compact Supply Unit

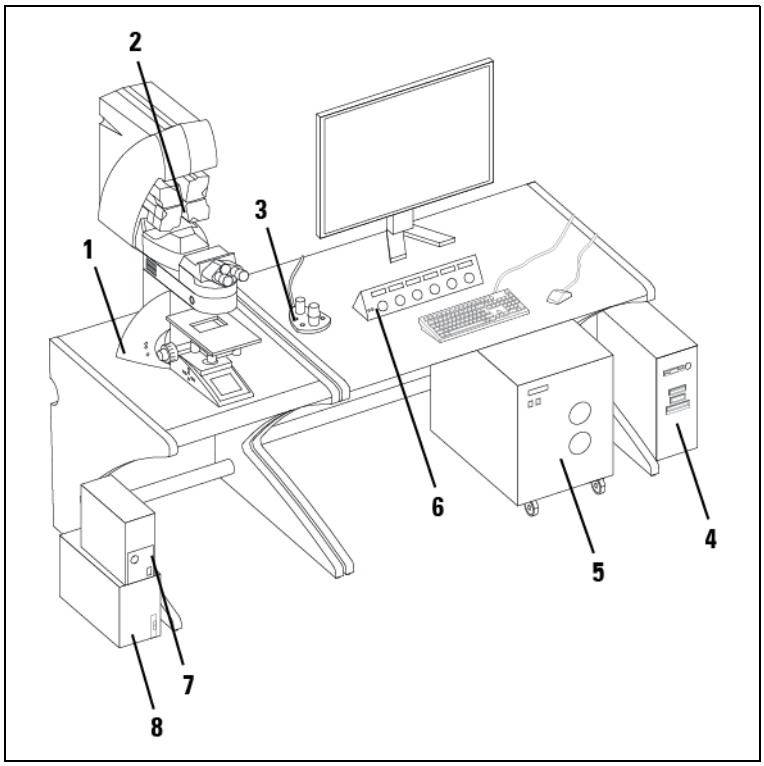

Figure 2: TCS SP8 with Upright Microscope and Compact Supply Unit

1 Upright microscope
2 Scan head
3 SmartMove
4 Workstation
5 Compact supply unit
6 Control panel
7 Fluorescence lamp EL6000
8 Microscope electronics box

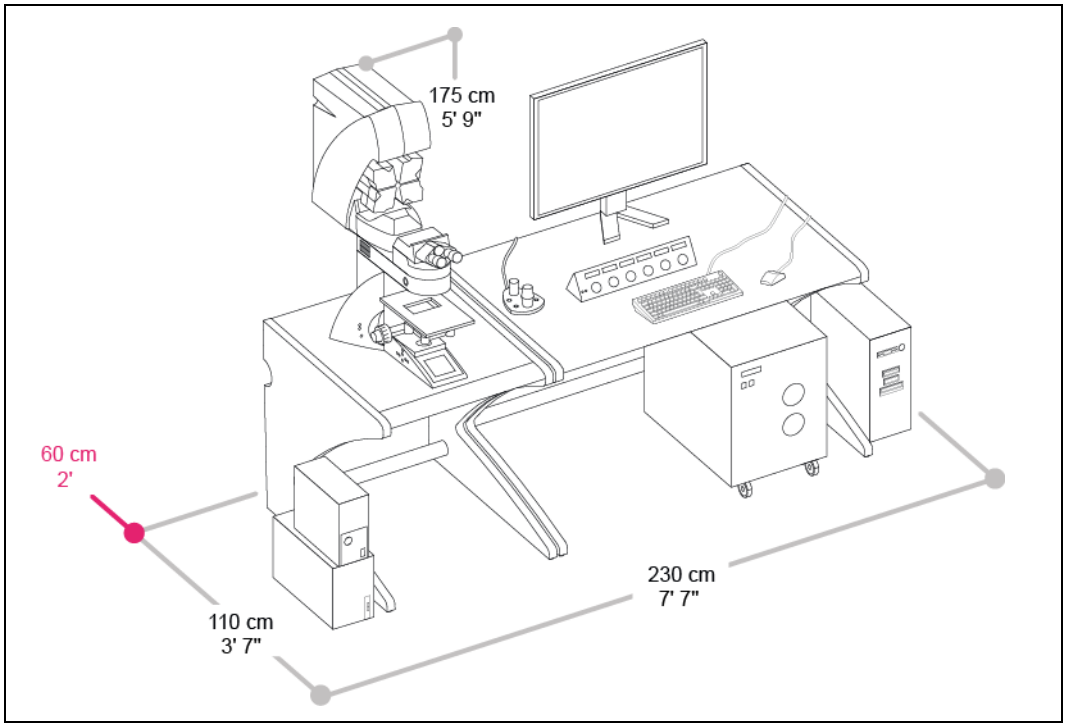

Figure 3: Dimensions of TCS SP8 with upright microscope and compact supply unit

7.1.2 TCS SP8 with Upright Microscope and Flexible Supply Unit

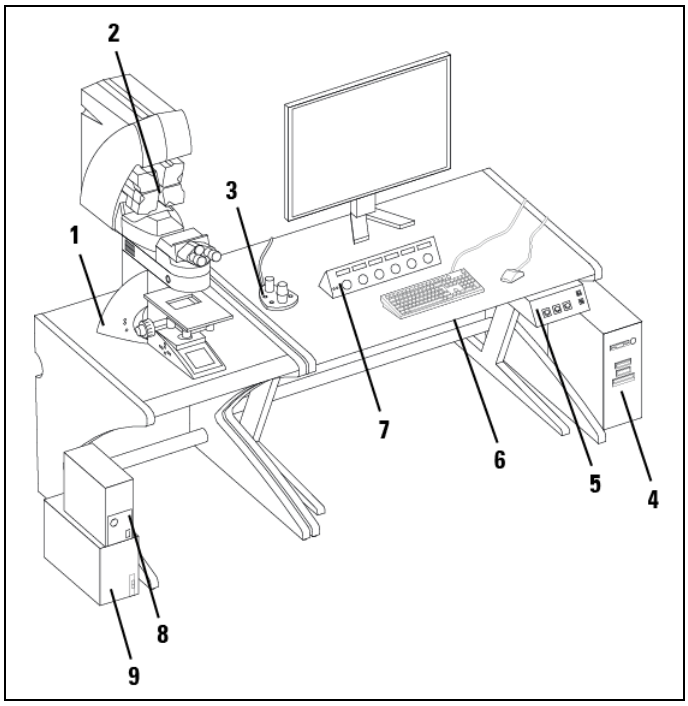

Figure 4: TCS SP8 with upright microscope and flexible supply unit

1 Upright microscope
2 Scan head
3 SmartMove
4 Workstation
5 Main switch board
6 Flexible supply unit
7 Control panel
8 Fluorescence lamp EL6000
9 Microscope electronics box

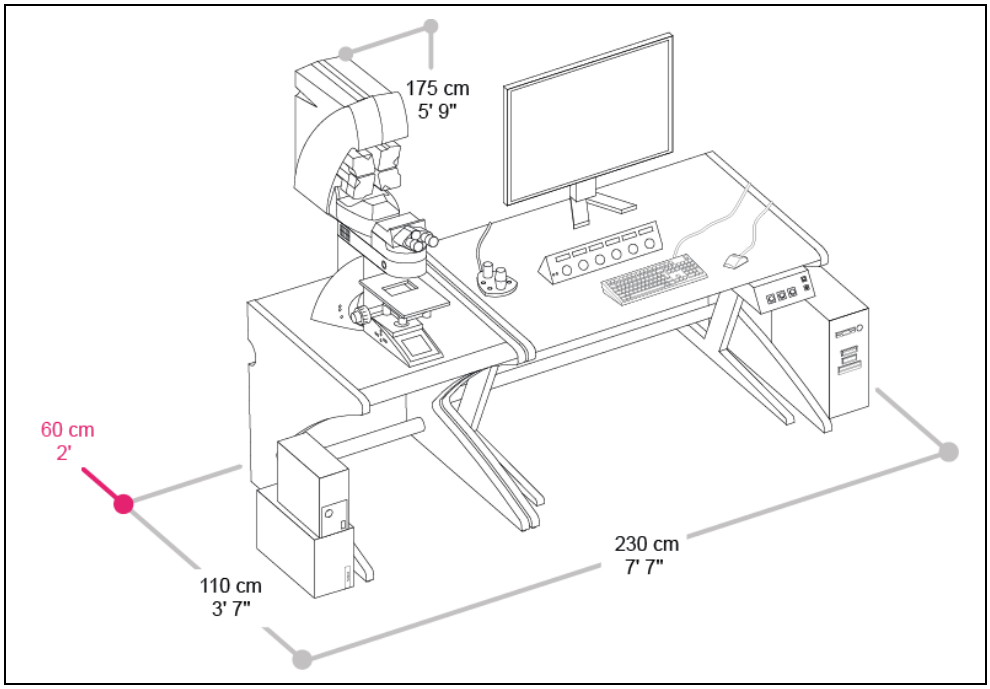

Figure 5: Dimensions of TCS SP8 with upright microscope and flexible supply unit

7.1.3 TCS SP8 with Inverted Microscope and Compact Supply Unit

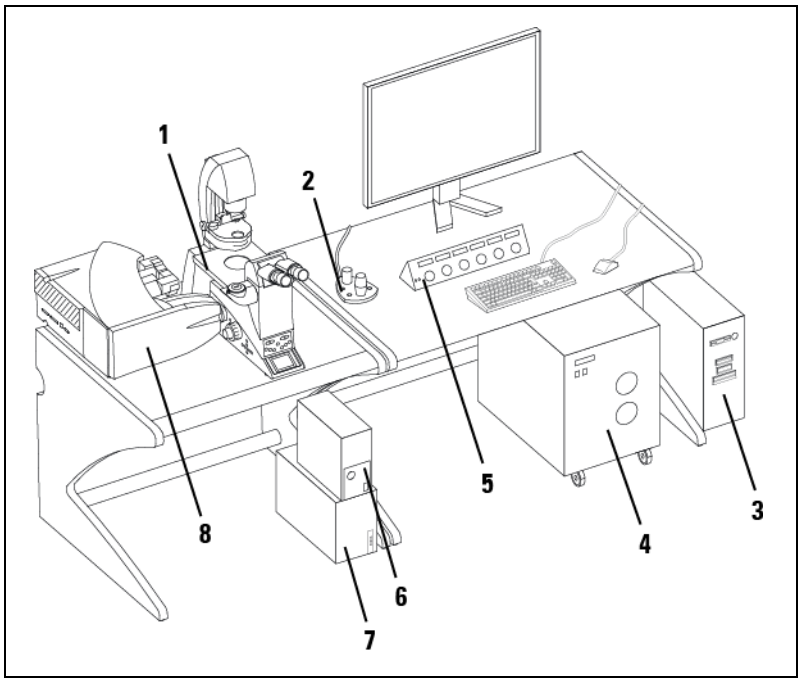

Figure 6: TCS SP8 with inverted microscope and compact supply unit

1 Inverted microscope
2 SmartMove
3 Workstation
4 Compact supply unit
5 Control panel
6 Fluorescence lamp EL6000
7 Microscope electronics box
8 Scan head

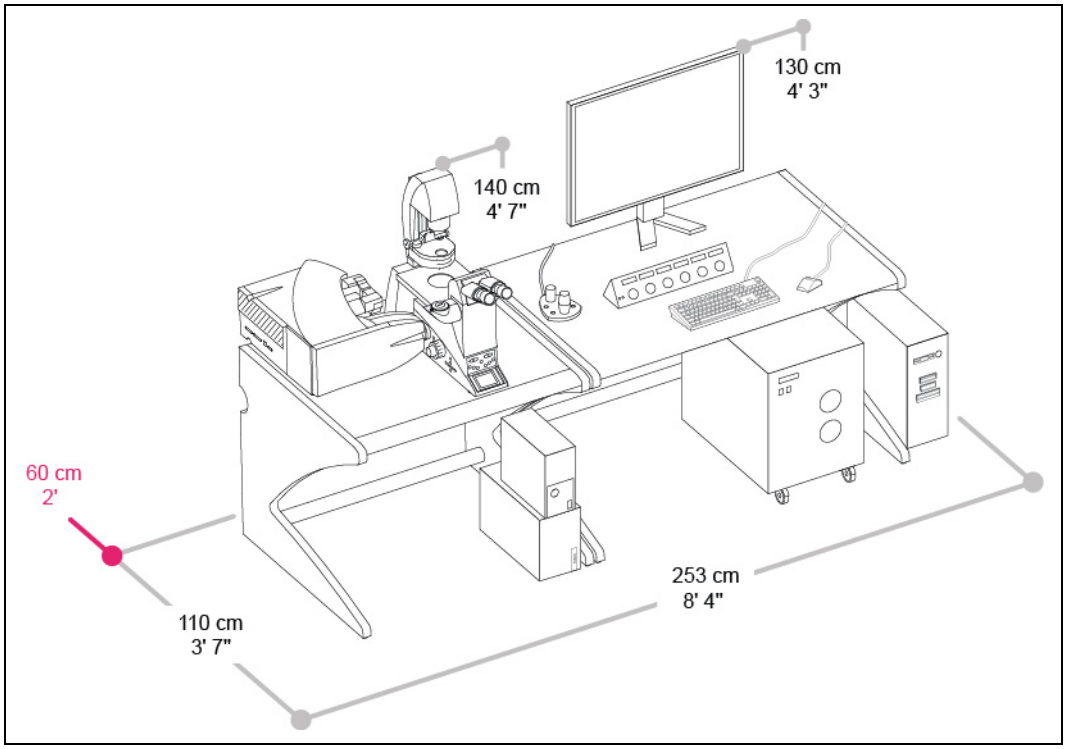

Figure 7: Dimensions of TCS SP8 with inverted microscope and compact supply unit

7.1.4 TCS SP8 with Inverted Microscope and Flexible Supply Unit

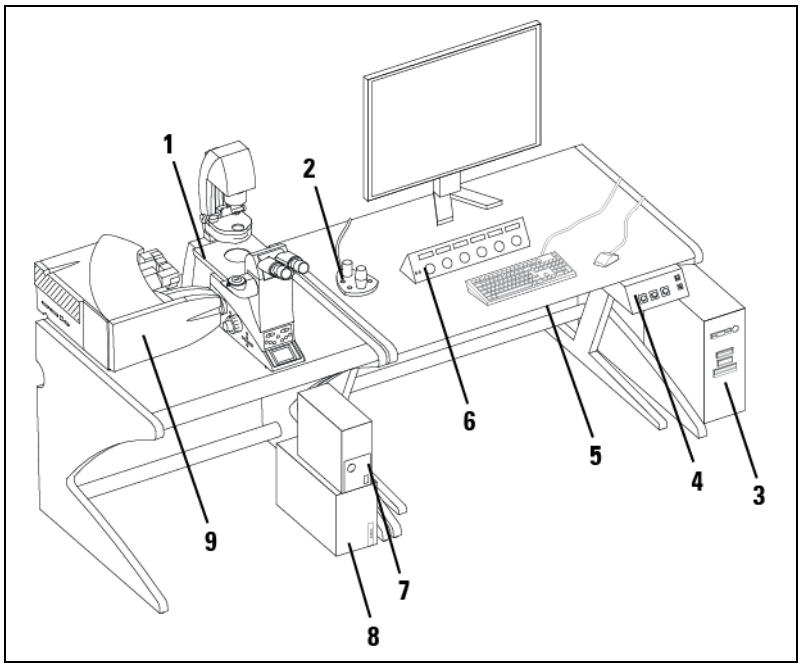

Figure 8: TCS SP8 with inverted microscope and flexible supply unit

1 Inverted microscope
2 SmartMove
3 Workstation
4 Main switch board
5 Flexible supply unit
6 Control panel
7 Fluorescence lamp EL6000
8 Microscope electronics box
9 Scan head

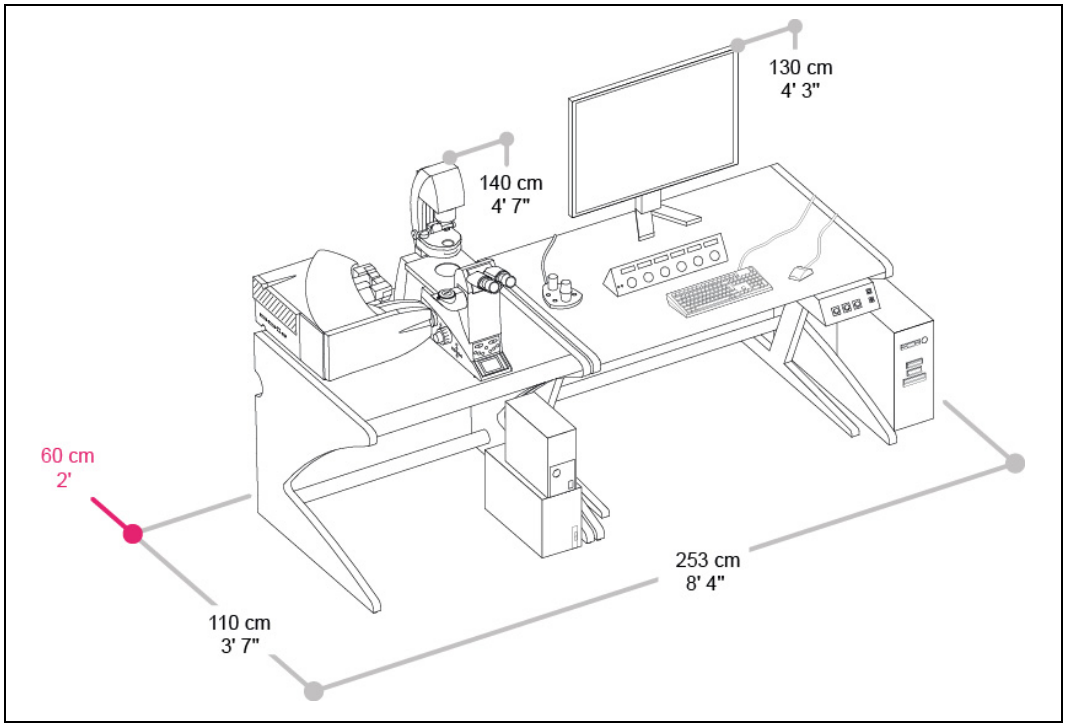

Figure 9: Dimensions of TCS SP8 with Inverted Microscope and Flexible Supply Unit

7.2 TCS SP8 MP System Variants

7.2.1 TCS SP8 MP with DM6000 and IR Laser without Dispersion Compensation

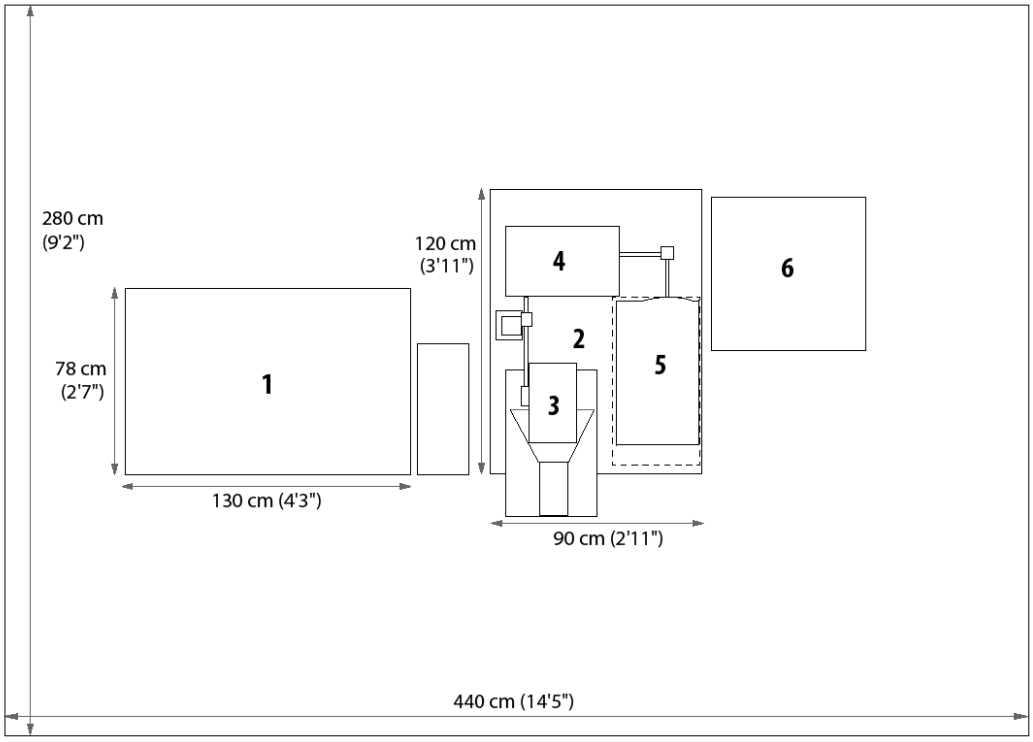

Figure 10: System overview of the TCS SP8 MP with DM6000 and IR laser without dispersion compensation

1 Stage with supply unit (compact or flexible)

2 Optical table, 90 x 120 cm (2'11" x 3'11")

3 Microscope DM6000

4 Beam coupling unit

5 IR laser without dispersion compensation

6 Power supply and cooling of the IR laser

7.2.2 TCS SP8 MP with DM6000 and IR Laser with Dispersion Compensation

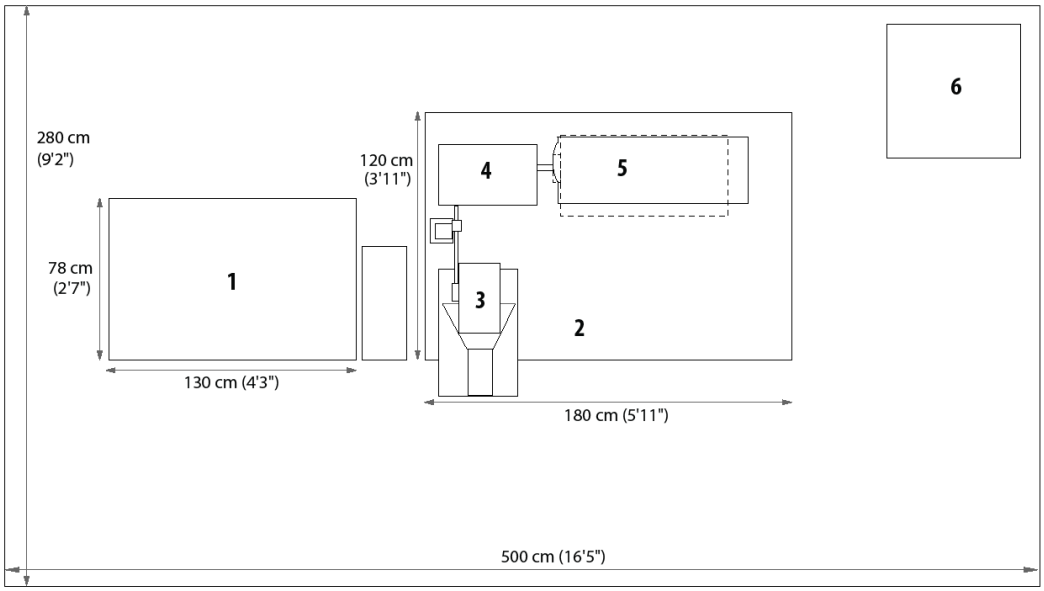

Figure 11: System overview of the TCS SP8 MP with DM6000 and IR laser with dispersion compensation

1 Stage with supply unit (compact or flexible)

2 Optical table, 180 x 120 cm (5'11" x 3'11")

3 Microscope DM6000

4 Beam coupling unit

5 IR laser with dispersion compensation

6 Power supply and cooling of the IR laser

7.2.3 TCS SP8 MP with DMI6000 and IR Laser without Dispersion Compensation

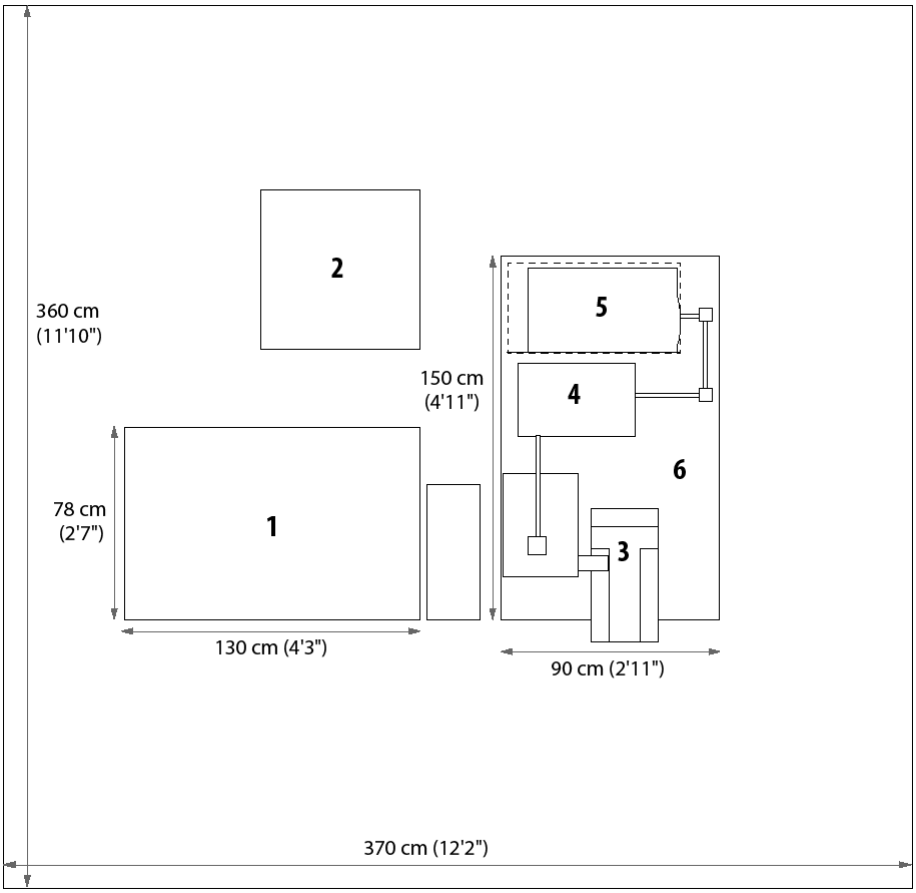

Figure 12: System overview of the TCS SP8 MP with DMI6000 and IR laser without dispersion compensation

1 Stage with supply unit (compact or flexible)

2 Power supply and cooling of the IR laser

3 Microscope DMI6000

4 Beam coupling unit

5 IR laser without dispersion compensation

6 Optical table, 90 x 150 cm (2'11" x 4'11")

7.2.4 TCS SP8 MP with DMI6000 and IR Laser with Dispersion Compensation

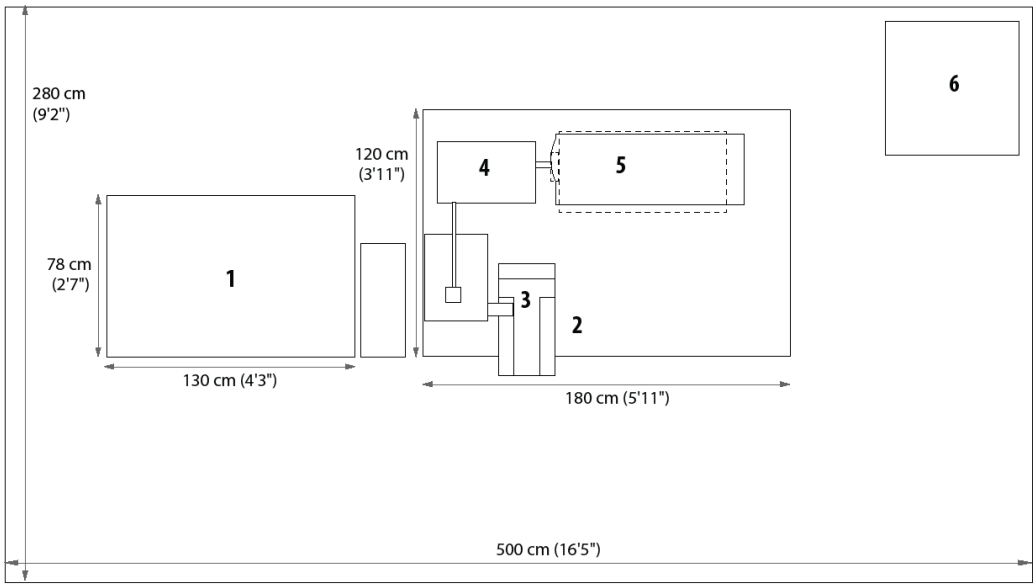

Figure 13: System overview of the TCS SP8 MP with DMI6000 and IR laser with dispersion compensation

1 Stage with supply unit (compact or flexible)

2 Optical table, 180 x 120 cm (5'11" x 3'11")

3 Microscope DMI6000

4 Beam coupling unit

5 IR laser with dispersion compensation

6 Power supply and cooling of the IR laser

7.2.5 TCS SP8 MP with DMI6000 and InSight DeepSee laser

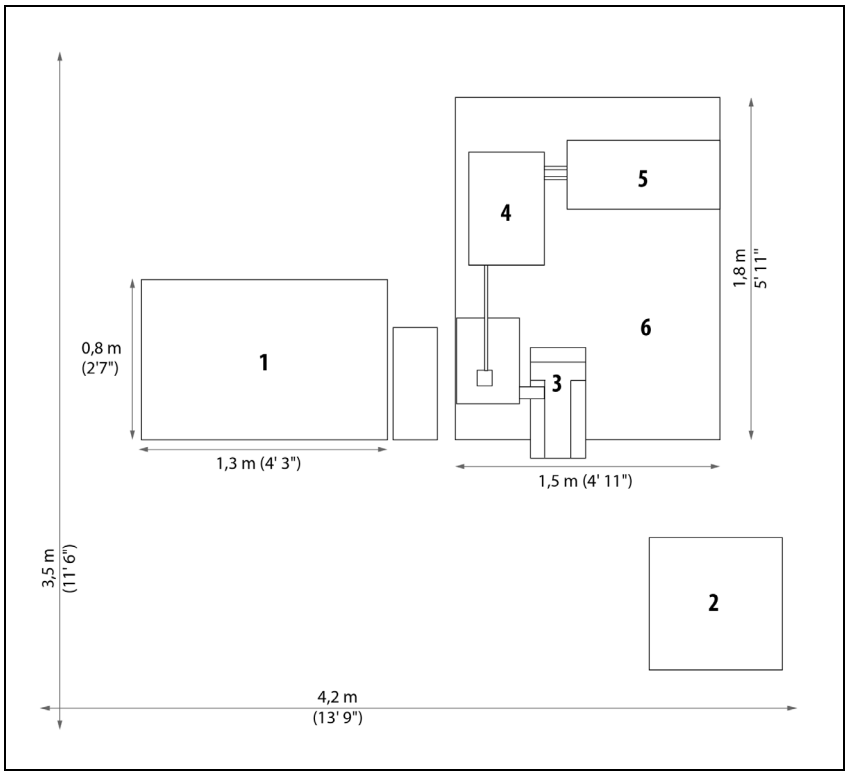

Figure 14: vSystem overview of the TCS SP8 MP with DMI6000 and InSight DeepSee laser (dual)

1 Stage with supply unit (compact or flexible)

2 Power supply and cooling of the IR laser

3 Microscope DMI6000

4 Beam coupling unit

5 InSight DeepSee laser (dual)

6 Optical table, 1.5m x 1.8m (4'11" x 5'11")

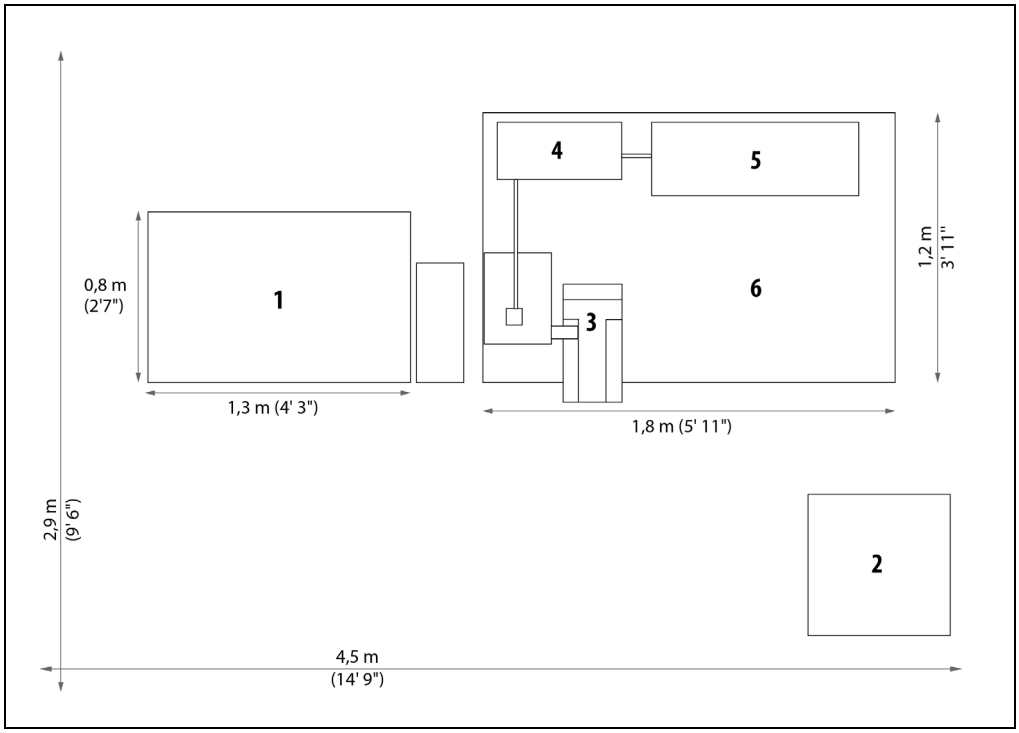

Figure 15: System overview of the TCS SP8 MP with DMI6000 and InSight DeepSee laser (single)

1 Stage with supply unit (compact or flexible)

2 Power supply and cooling of the IR laser

3 Microscope DMI6000

4 Beam coupling unit

5 InSight DeepSee laser (single)

6 Optical table 1.8m x 1.2m (5'11" x 3'11")

7.3 TCS SP8 X System Variants

7.3.1 TCS SP8 X with Upright Microscope

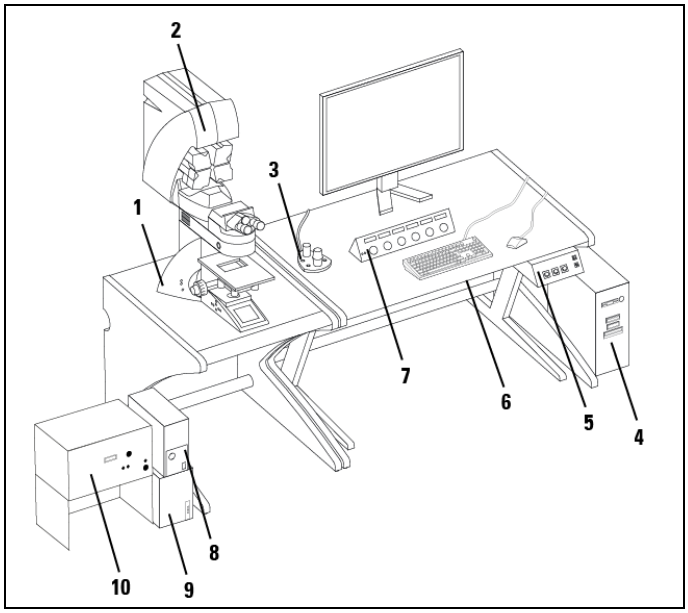

Figure 16: TCS SP8 X with upright microscope

1 Upright microscope
2 Scan head
3 SmartMove
4 Workstation
5 Main switch board
6 Flexible supply unit
7 Control panel
8 Fluorescence lamp EL6000
9 Microscope electronics box
10 White light laser

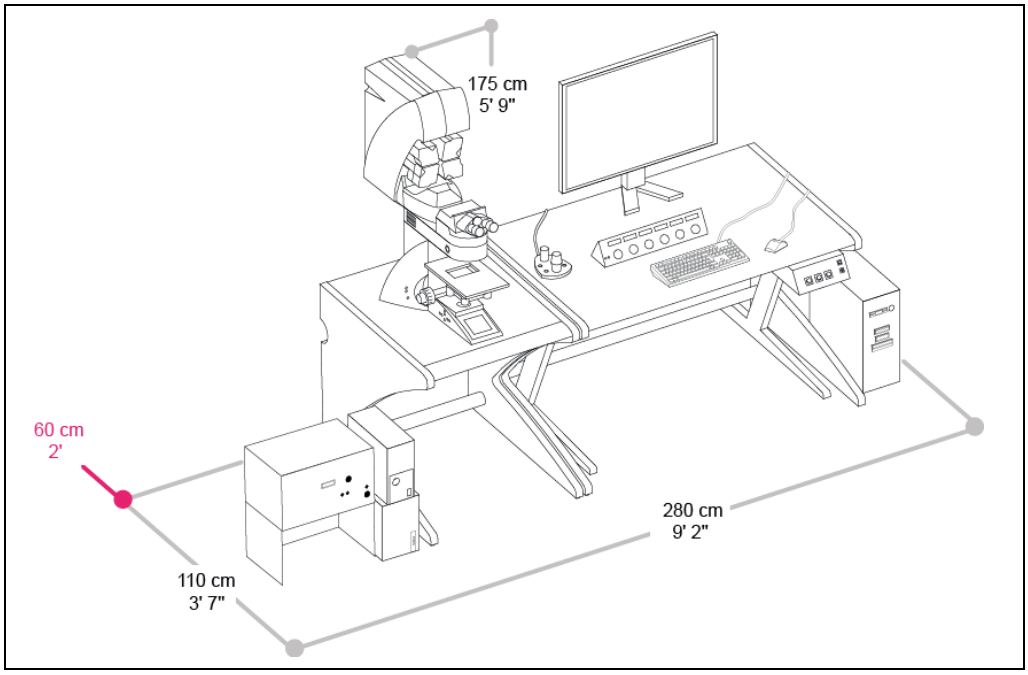

Figure 17: Dimensions of TCS SP8 X with upright microscope

7.3.2 TCS SP8 X with Inverted Microscope

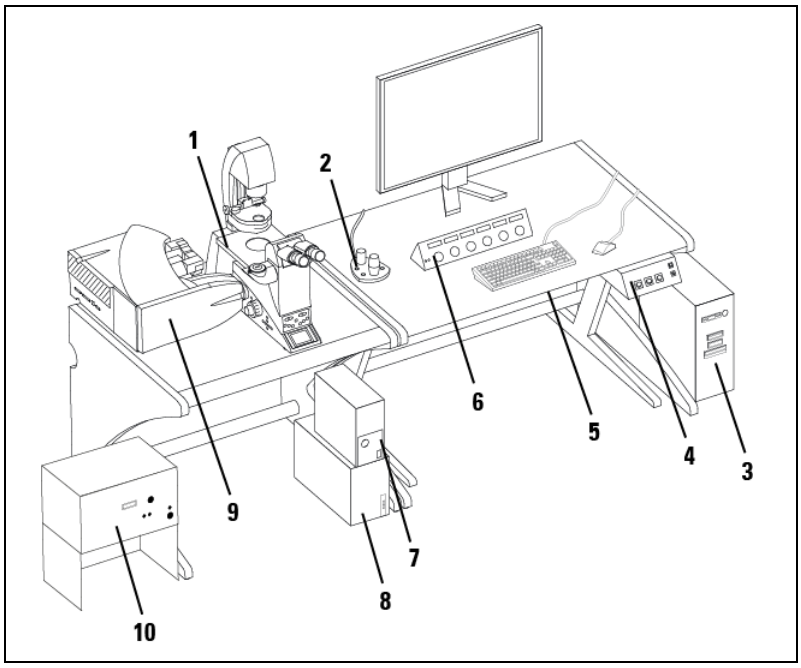

Figure 18: TCS SP8 X with inverted microscope

1 Inverted microscope
2 SmartMove
3 Workstation
4 Main switch board
5 Flexible supply unit
6 Control panel
7 Fluorescence lamp EL6000
8 Microscope electronics box
9 Scan head
10 White light laser

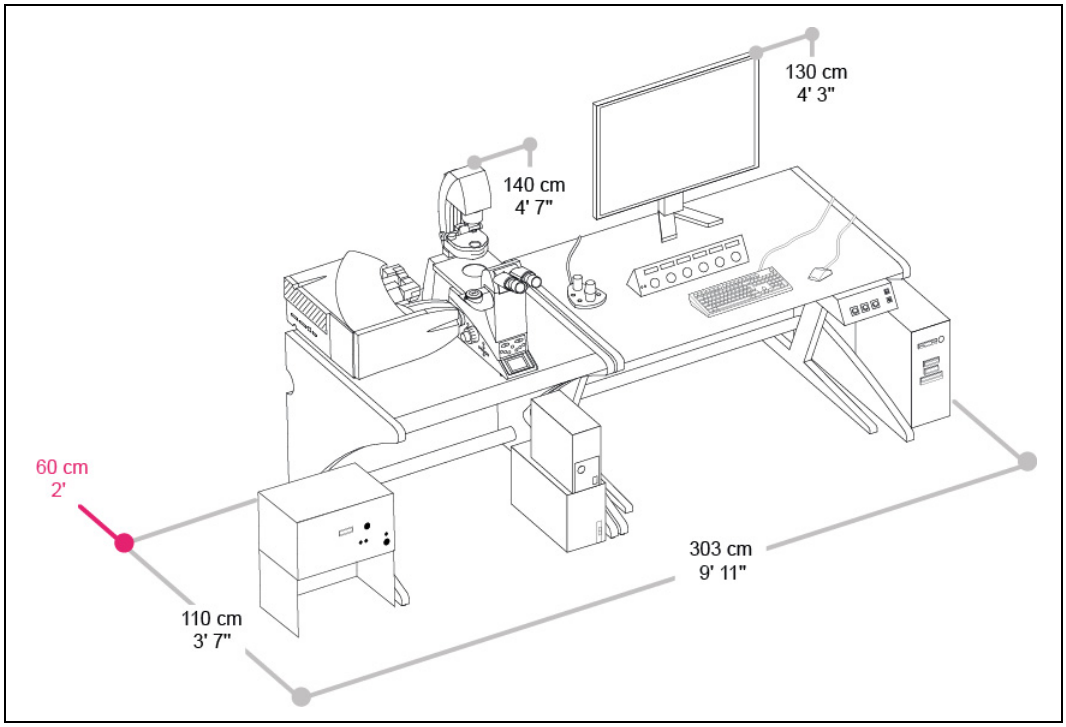

Figure 19: Dimensions of TCS SP8 X with inverted microscope

7.4 TCS SP8 with External UV laser

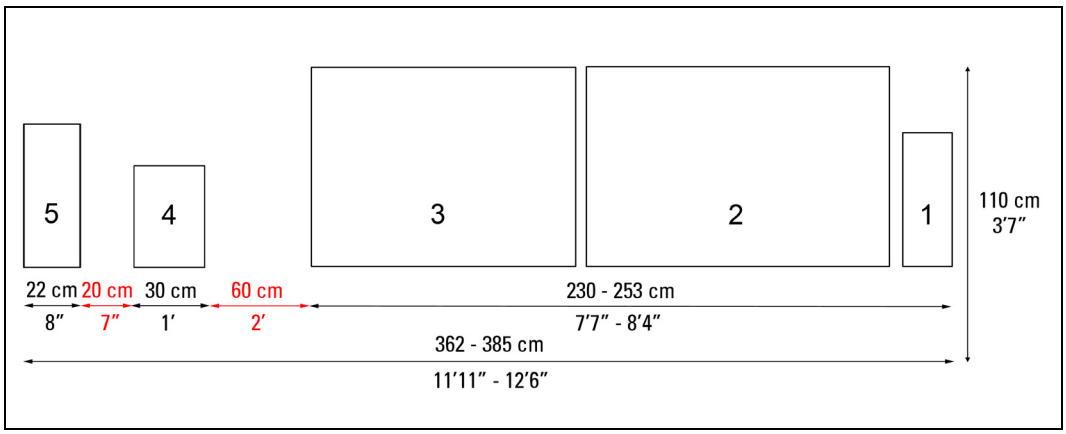

Figure 20: **Overview with dimensions of TCS SP8 with external UV laser**

1 Workstation
2 Stage with supply unit
3 Microscope stage with scan head
4 Power supply (external UV laser)
5 External UV laser

7.5 Controls on the Supply Unit

7.5.1 Main Switch Board on the Flexible Supply Unit

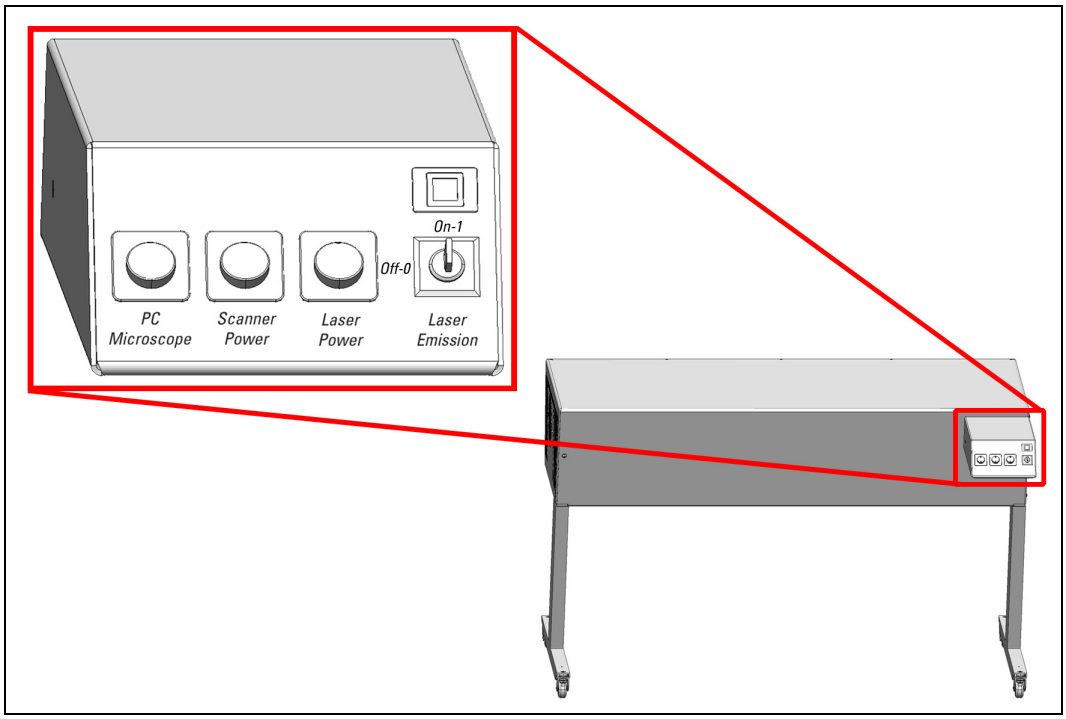

Figure 21: **Overview of the main switch board on the flexible supply unit**

7.5.2 Control Panel Field on the Compact Supply Unit

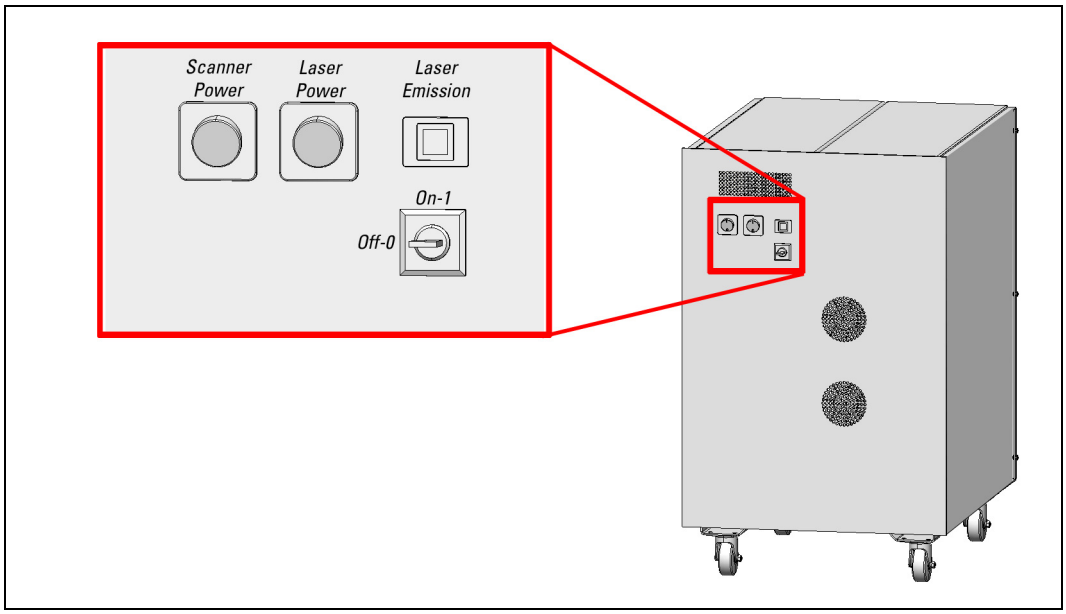

Figure 22: **Overview of the Control Panel Field on the Compact Supply Unit**

7.6 Technical Data

7.6.1 Dimensions

	Dimensions of the system (length x depth x height)
TCS SP8 with upright microscope	230 x 110 x 175 cm (7'7" x 3'7" x 5'9")
TCS SP8 with inverted microscope	253 x 110 x 140 cm (8'4" x 3'7" x 4'7")
TCS SP8 MP with DM6000 and IR Laser without Dispersion Compensation	See **Figure 10**
TCS SP8 MP with DM6000 and IR Laser with Dispersion Compensation	See **Figure 11**
TCS SP8 MP with DMI6000 and IR Laser without Dispersion Compensation	See **Figure 12**
TCS SP8 MP with DMI6000 and IR Laser with Dispersion Compensation	See **Figure 13**
TCS SP8 MP with DMI6000 and InSight DeepSee laser (dual)	See **Figure 14**
TCS SP8 MP with DMI6000 and InSight DeepSee laser (single)	See **Figure 15**
TCS SP8 X with upright microscope	280 x 110 x 175 cm (9'2" x 3'7" x 5'9")
TCS SP8 X with inverted microscope	303 x 110 x 140 cm (9'11" x 3'7" x 4'7")
TCS SP8 with external UV laser and upright microscope	362 x 110 x 175 cm (11'11" x 3'7" x 5'9")
TCS SP8 with external UV laser and inverted microscope	385 x 110 x 140 cm (12'6" x 3'7" x 4'7")

	Dimensions of the supply unit (length x depth x height)
Compact Supply Unit	38 x 54 x 50 cm (1'3" x 1'9" x 1'8")
Flexible Supply Unit	110 x 70 x 90 cm (3'7" x 2'4" x 2'11")

7.6.2 Weight of the Supply Unit

Compact Supply Unit	40 kg (88 lbs)
Flexible Supply Unit	90 kg (198 lbs)

7.6.3 Electrical Specifications

	Flexible Supply Unit	Compact Supply Unit	White light laser
Supply voltage	100 V~ to 240 V~ ± 10%, grounded		
Power consumption	2x 1600 VA (Including peripheral devices connected to the flexible supply unit's multiple socket outlet, see **Chapter 8.5**)	700 VA	400 VA
Fuse	LS automated process	2x T8AH, 250 V AC	LS automated process for TCS SP8. 2x T4AH, 250 V AC for white light laser
Protection class	I		
Type of protection	Covered design		
Overvoltage category	II		
Frequency	50/60 Hz		

You can find more information on electrical connection requirements in **Chapter 8.4** and in **Chapter 8.5**.

Observe the user manuals for external lasers

Please refer to the information from the documents provided by the laser manufacturer for the external lasers. Pay particular attention to the laser manufacturer's notes!

7.7 "Electromagnetic Compatibility"

In regards to emitted interference, this is a class A system (CISPR 11). This system is suitable for use in buildings that do not include domestic premises and buildings not directly connected to a low-voltage power supply network that supplies buildings used for domestic purposes.

The system can cause radio interference in a household environment. In these cases, the operator may have to take measures to eliminate the interference.

When using internal and external HyDs, it is recommended that the system only be operated in a controlled electromagnetic environment. This is because the use of cell phones or other radio transmitting devices such as DECT phones can cause picture interference if used in the immediate vicinity of the system.

7.8 Serial Number

The serial number for your system is located on the rear side of the scan head:

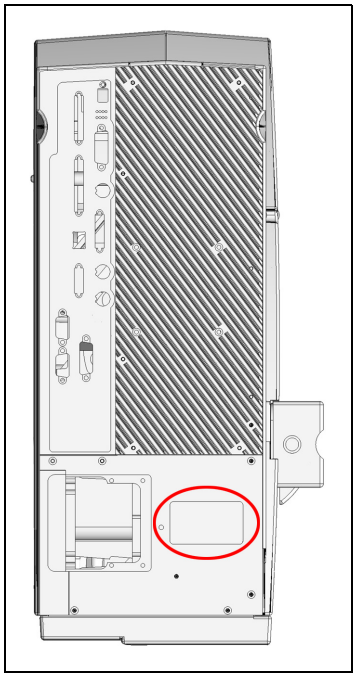

Figure 23: Rear side of the scan head – label with serial number

8 Ambient Conditions

Here you can find a summary of the information regarding the size and design of the room and the general requirements regarding ambient conditions. Be absolutely sure to comply with the ambient conditions.

8.1 General Requirements Regarding Ambient Conditions

- You may use the system only in indoor areas that are dust-free. The room must be free of dust, oil and chemical vapors.
- Avoid direct sunlight and vibrations, since these can distort measurements and micrographic scans. We also recommend using a room that can be completely darkened.
- The room must meet national safety regulations for laser safety areas.
- Never expose the system to rain, fluids, or humidity. Do not set up the system under water pipes, air-conditioning systems, or other piping. Otherwise, this could cause fire and electrical shocks to the system and the electrical components.
- The room should be equipped with a telephone connection to contact Leica Microsystems CMS GmbH for phone support. For RemoteCare, an Internet connection is also needed.
- The system should be set up in a separate room, in order to be able to provide a constant temperature and appropriate ambient lighting without having to address needs of other systems, instruments, and room users.

Temperature range for operation	18 to 25 °C (64 to 77 °F)
optimum optical behavior	22 °C ± 1 °C (72 °F ± 1.8 °F)
Pollution degree	2 (protect system against dust)
Permitted relative humidity	20 to 60% (non-condensing)
Maximum location elevation	2000 m above sea level

- HyD RLDs are cooled. To ensure optimal performance from the detectors, the humidity of the surrounding air must not exceed 60% at 25 °C. To prevent potential damage due to condensation, the cooling shuts off automatically if its value is exceeded.

8.2 Vibrations

Vibrations must be reduced to a minimum; for that reason, do not set up the system near any of the following sources of vibration: shakers, ultracentrifuges, pumps, compressors, refrigerators, vending machines, elevators.

Maximum tolerable vibrations:

Frequency range [5 Hz – 30 Hz]	less than 30 µm/s root mean square
Frequency range [> 30 Hz]	less than 60 µm/s root mean square

8.3 Room Dimensions

The room should be as large as possible so that multiple operators can find room around the system.The free space to the right, left and rear of the system should be 60 cm. In front of the system there must be 110 cm of free space so that the service technicians can access the system as necessary.

WARNING **Fire or overheating of the system possible**

Electrical peripheral devices must be placed at least 10 cm (4") away from the wall and from flammable substances to prevent overheating or fire of the system.

Also make sure that doors and passages are at least 100 cm wide in order to be able to safely transport the system.

The following minimum size should be planned for the space:

	Minimum space requirements (length x depth)
TCS SP8 with upright microscope	350 x 280 cm (11'6" x 9'2")
TCS SP8 with inverted microscope	373 x 280 cm (12'3" x 9'2")
TCS SP8 MP with DM6000 and IR laser without precompensation	440 x 280 cm (14'5" x 9'2")
TCS SP8 MP with DM6000 and IR laser with precompensation	500 x 280 cm (16'5" x 9'2")
TCS SP8 MP with DMI6000 and IR laser without precompensation	370 x 360 cm (12'2" x 11'10")
TCS SP8 MP with DMI6000 and InSight DeepSee laser (single)	450 x 290 cm (14'9" x 9'6"
TCS SP8 MP with DMI6000 and InSight DeepSee laser (dual)	420 x 350 (13'9" x 11'6")
TCS SP8 MP with DMI6000 and IR laser with precompensation	500 x 280 cm (16'5" x 9'2")
TCS SP8 X with upright microscope	400 x 280 cm (13'1" x 9'2")
TCS SP8 X with inverted microscope	423 x 280 cm (13'10" x 9'2"
TCS SP8 with external UV laser and upright microscope	482 x 280 cm (15'10" x 9'2")
TCS SP8 with external UV laser and inverted microscope	505 x 280 cm (16'7" x 9'2")

8.4 Electrical Connection Requirements

WARNING **Electric shock is possible when using ungrounded sockets**

This system is designed for connection to grounded (earthed) outlets. The grounding plug performs an important safety function. To avoid the risk of electrical shock or damage to the instrument, do not disable this feature. Operation without grounded sockets is not permitted.

8.4.1 TCS SP8 with flexible supply unit

Supply voltage	100 V~ to 240 V~ ± 10%, grounded
Frequency	50/60 Hz
Power connection	Three separate electric circuits with Power supply voltage: 100 V - 120 V, fuse protection: 20 A or: Power supply voltage: 200 V - 240 V, fuse protection: 12 - 16 A (Two for the flexible supply unit's power supply and one for supplying peripheral devices). To prevent damage to the instrument, the two types of voltage (200 to 240 V~ and 100 to 120 V~) must not be combined. Depending on the system configuration, further electrical circuits may be required.
Power supply for USA	Two terminals of the NEMA 5-20 type for the supply unit Terminals of the NEMA 5-15 type for the remaining instruments

8.4.2 TCS SP8 with compact supply unit

Supply voltage	100 V~ to 240 V~ ± 10%, grounded
Frequency	50/60 Hz
Power connection	Two separate electric circuits with Power supply voltage: 100 V - 120 V, fuse protection: 20 A or: Power supply voltage: 200 V - 240 V, fuse protection: 12 - 16 A (One for the compact supply unit's power supply and one for supplying peripheral devices) To prevent damage to the instrument, the two types of voltage (200 to 240 V~ and 100 to 120 V~) must not be combined. Depending on the system configuration, further electrical circuits may be required.
Power supply for USA	Terminals of type NEMA 5-15

8.4.3 TCS SP8 MP with flexible supply unit

Supply voltage	100 V~ to 240 V~ ± 10%, grounded
Frequency	50/60 Hz
Power connection	Four separate electric circuits with Power supply voltage: 100 V - 120 V, fuse protection: 20 A or: Power supply voltage: 200 V - 240 V, fuse protection: 12 - 16 A (Two for the flexible supply unit's power supply and one for supplying peripheral devices) To prevent damage to the instrument, the two types of voltage (200 to 240 V~ and 100 to 120 V~) must not be combined. Depending on the system configuration, further electrical circuits may be required.
Power supply for USA	Two terminals of the NEMA 5-20 type for the supply unit Terminals of the NEMA 5-15 type for the remaining instruments
When using HyD RLDs	An additional power supply

8.4.4 TCS SP8 MP with compact supply unit

Supply voltage	100 V~ to 240 V~ ± 10%, grounded
Frequency	50/60 Hz
Power connection	Three separate electric circuits with Power supply voltage: 100 V - 120 V, fuse protection: 20 A or: Power supply voltage: 200 V - 240 V, fuse protection: 12 - 16 A (One for the compact supply unit's power supply and one for supplying peripheral devices) To prevent damage to the instrument, the two types of voltage (200 to 240 V~ and 100 to 120 V~) must not be combined. Depending on the system configuration, further electrical circuits may be required.
Power supply for USA	Terminals of type NEMA 5-15
When using HyD RLDs	An additional power supply

8.4.5 TCS SP8 X

Supply voltage	100 V~ to 240 V~ ± 10%, grounded
Frequency	50/60 Hz

Power connection	Three separate electric circuits with Power supply voltage: 100 V - 120 V, fuse protection: 20 A or: Power supply voltage: 200 V - 240 V, fuse protection: 12 - 16 A (Two for the flexible supply unit's power supply and one for supplying peripheral devices) To prevent damage to the instrument, the two types of voltage (200 to 240 V~ and 100 to 120 V~) must not be combined. Depending on the system configuration, further electrical circuits may be required.
Power supply for USA	Two terminals of the NEMA 5-20 type for the supply unit Terminals of the NEMA 5-15 type for the remaining instruments

8.4.6 External Lasers

Observe the user manuals for external lasers

Please refer to the information from the documents provided by the laser manufacturer for the external lasers. Pay particular attention to the laser manufacturer's notes!

8.5 Load capacity of the multiple socket outlet on the flexible supply unit

The total power consumption of all loads connected to the multiple socket outlet (see **Figure 24**) must not exceed 800 VA.

The terminals are intended for:

- Workstation
- Monitor
- Microscope

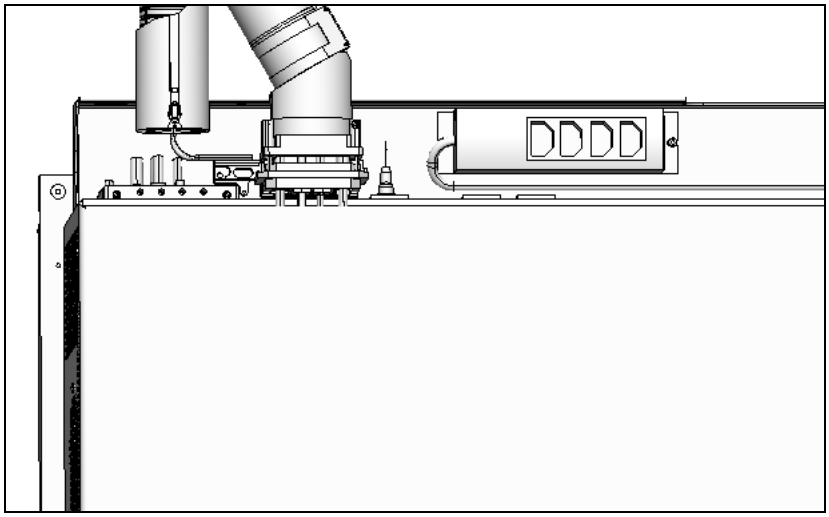

Figure 24: **Load capacity on the rear side of the multiple socket outlet on the flexible supply unit**

8.6 Waste Heat and Cooling

NOTICE	**Instruments may sustain damage** Never install the system close to air conditioners or other ventilation systems. Air from air-conditioning systems or other ventilation equipment should not blow directly on the microscope.

i	**Use a high-performance air-conditioning system** We recommend a high-performance air-conditioning system for operating the system to prevent large temperature fluctuations in the room.

8.6.1 TCS SP8 with flexible supply unit

Waste heat of the complete system, including the argon laser	3.2 kW
Waste heat of the argon laser	1.6 kW

For cooling, the argon laser must be connected to the provided argon laser fan. The following space is required:

Standard fan	about 30 x 30 cm (1' x 1')
Noise-reduced laser fan	50 x 60 cm (1'8" x 2')

In addition, it is possible to connect the argon laser exhaust to an in-house exhaust system:

Hose length	400 cm (13'1"), provided by default
Diameter of adapter piece	15 cm (6")
Air flow rate	400 m^3/h (14,126 ft^3/h)

The remaining waste heat (1.6 kW) must be extracted; otherwise the room temperature will rise.

8.6.2 TCS SP8 with compact supply unit

Waste heat of the complete system with a compact supply unit	1.7 kW

8.6.3 TCS SP8 MP with flexible supply unit

Waste heat of the complete system, including the argon laser	6.2 kW
HyD RLD	100 W
Waste heat of the argon laser	1.6 kW

For cooling, the argon laser must be connected to the provided argon laser fan. The following space is required:

Standard fan	about 30 x 30 cm (1' x 1')
Noise-reduced laser fan	50 x 60 cm (1'8" x 2')

In addition, it is possible to connect the argon laser exhaust to an in-house exhaust system:

Hose length	400 cm (13'1"), provided by default
Diameter of adapter piece	15 cm (6")
Air flow rate	400 m^3/h (14,126 ft^3/h)

The remaining waste heat (4.6 kW/4.7 kW) must be extracted; otherwise the room temperature will rise. In order to maintain a constant room temperature, a high-performance air-conditioning system should be used.

8.6.4 TCS SP8 MP with compact supply unit

Waste heat of the complete system	4.7 kW
HyD RLD	100 W

8.6.5 TCS SP8 X

Waste heat of the complete system, including the argon laser and white light laser	3.6 kW
Waste heat of the argon laser	1.6 kW

For cooling, the argon laser must be connected to the provided argon laser fan. The following space is required:

Standard fan	about 30 x 30 cm (1' x 1')
Noise-reduced laser fan	50 x 60 cm (1'8" x 2')

In addition, it is possible to connect the argon laser exhaust to an in-house exhaust system:

Hose length	400 cm (13'1"), provided by default
Diameter of adapter piece	15 cm (6")
Air flow rate	400 m^3/h (14,126 ft^3/h)

The remaining waste heat (2 kW) must be extracted; otherwise the room temperature will rise.

8.6.6 External Lasers

Observe the user manuals for external lasers

Please refer to the information from the documents provided by the laser manufacturer for the external lasers. Pay particular attention to the laser manufacturer's notes!

9 Laser

It is mandatory to observe the laser safety measures for laser class 3B / IIIb (VIS and UV lasers) or for laser class 4 / IV (MP systems) in accordance with applicable national and federal regulations.

You may only use the laser listed here, as the laser safety devices are only designed for the laser variants listed here.

9.1 Laser Classes

System variant	System variant laser class	Usable lasers	Wavelength range
SP8	3B / IIIb	VIS	400 - 700 nm (visible laser radiation)
		UV	350 - 400 nm (invisible laser radiation)
SP8 X	3B / IIIb	VIS	400 - 700 nm (visible laser radiation)
		UV	350 - 400 nm (invisible laser radiation)
SP8 MP	4 / IV	VIS	400 - 700 nm (visible laser radiation)
		UV	350 - 400 nm (invisible laser radiation)
		IR	680 - 1600 nm (invisible laser radiation)

9.2 Overview of Usable Lasers

9.2.1 VIS/UV Lasers for TCS SP8

The TCS SP8 features a combination of the lasers listed below:

Laser type	Wavelength (nm)	Maximum light output at laser output (mW)	Maximum light output in focal plane (mW)	Pulse duration
UV, external	355	< 500	< 18	Continuous wave (cw)
Diode 405	405	< 120	< 7	Continuous wave (cw)
Diode 405 p	405	< 5 (mean power)	< 0.3 (mean power)	pulsed, 60 ps
Diode 442	442	< 75	< 7	Continuous wave (cw)
Diode 448	448	100	10	Continuous wave (cw)
Ar	458, 476, 488, 496, 514	< 200	< 50	Continuous wave (cw)
OPSL 488	488	350	10	Continuous wave (cw)

OPSL 514	514	350	10	Continuous wave (cw)
OPSL 552	552	350	10	Continuous wave (cw)
DPSS 561	561	< 100	< 12	Continuous wave (cw)
HeNe	594	< 4	< 1	Continuous wave (cw)
HeNe	633	< 15	< 5	Continuous wave (cw)
Diode 638	638	350	10	Continuous wave (cw)

9.2.2 VIS/UV Lasers for TCS SP8 X

The TCS SP8 X features a combination of the lasers listed below:

Laser type	Wavelength (nm)	Maximum light output at laser output (mW)	Maximum light output in focal plane (mW)	Pulse duration
Diode 405	405	< 120	< 7	Continuous wave (cw)
Diode 405 p	405	< 5 (mean power)	< 0.3 (mean power)	pulsed, 60 ps
UV, external	355	< 500	< 18	Continuous wave (cw)
Ar	458, 476, 488, 496, 514	< 200	< 50	Continuous wave (cw)
White light laser	470 – 670	< 500	< 50	Pulsed

9.2.3 IR Lasers for TCS SP8 MP

The TCS SP8 MP can include a combination of all of the lasers listed in **Chapter 9.2.1** and **Chapter 9.2.2** - except for the external UV laser (355 nm) - and the following IR lasers:

9.2.3.1 Picosecond Laser

Laser type	Wavelength (nm)	Maximum light output at laser output (W)	Maximum light output in focal plane (W)	Pulse duration
MaiTai HP ps	690 - 1040	< 3.5	< 1.9	Pulsed 1.0 - 1.5 ps
Chameleon Ultra II ps	680 - 1080	< 4	< 1.9	Pulsed 1.0 - 1.5 ps

9.2.3.2 Femtosecond laser

Laser type	Wavelength (nm)	Maximum light output at laser output (W)	Maximum light output in focal plane (W)	Pulse duration
MaiTai fs	780 - 920	< 1.2	< 0.6	pulsed ~ 80 fs
MaiTai HP fs	690 - 1040	< 3.5	< 1.9	pulsed ~ 100 fs
MaiTai HP DeepSee	690 - 1040	< 3.5	< 1.9	pulsed ~ 100 fs
MaiTai eHP DeepSee	690 - 1040	< 3.5	< 1.9	pulsed ~ 70 fs
InSight DeepSee	680 - 1300	< 2.5	< 1.4	pulsed ~ 100 fs
Chameleon Ultra I fs	690 - 1040	< 4	< 1.9	pulsed ~ 140 fs
Chameleon Ultra II fs	680 - 1080	< 4	< 1.9	pulsed ~ 140 fs
Chameleon Vision II	680 - 1080	< 4.0	< 1.9	pulsed ~ 140 fs
Chameleon Vision S	690 - 1050	< 3.5	< 1.9	pulsed ~ 75 fs
Chameleon Ultra II Compact OPO	680 - 1080	< 4.0	< 1.9	pulsed ~ 140 fs
	1000 - 1300	< 1.6	< 0.8	pulsed > 100 fs
Chameleon Vision II Compact OPO	680 - 1080	< 4.0	< 1.9	pulsed ~ 140 fs
	1000-1280	< 1.6	< 0.8	pulsed > 100 fs

10 Safety Features

The Leica TCS SP8 system is available with a flexible or a compact supply unit. Note the safety features described here that apply to your supply unit.

10.1 Main Circuit Breaker for Disconnecting the Power Supply

10.1.1 Compact Supply Unit

In order to switch the power off on the compact supply unit, the power plug must be disconnected.

10.1.2 Flexible Supply Unit

The main circuit breaker is located on the right rear side of the flexible supply unit. It is used to de-energize the complete system using a single switch (see **Figure 25**).

The main circuit breaker functions as a switch and as an overcurrent fuse. The main circuit breaker is not to be used as the regular on/off switch for the system.

The supply unit must be set up so that the main circuit breaker is freely accessible at all times.

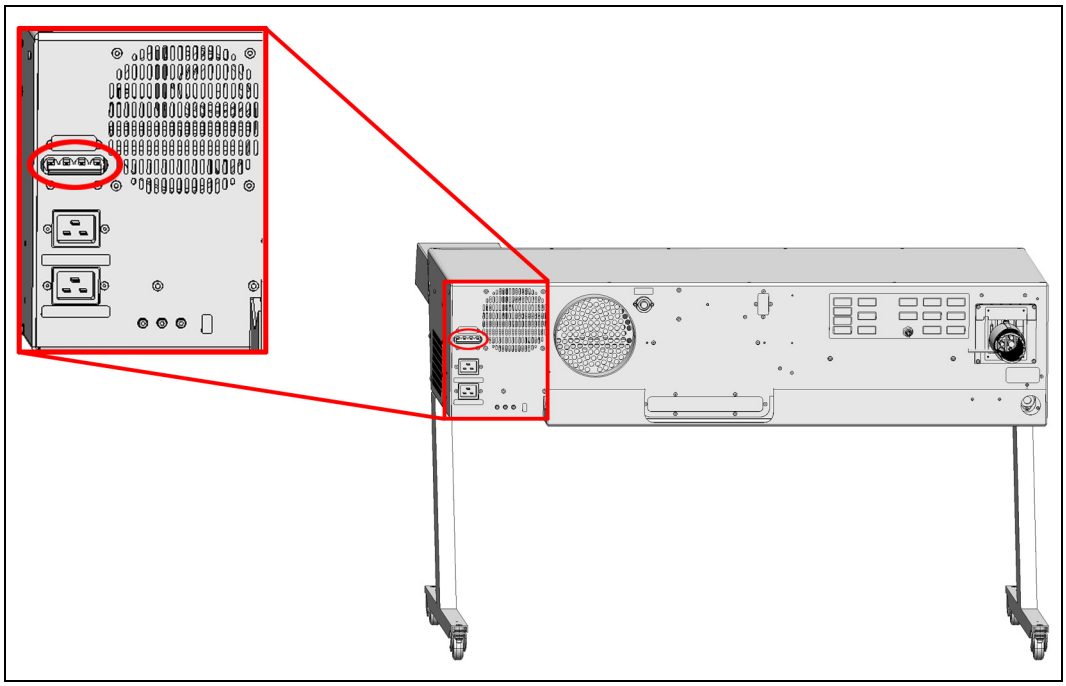

Figure 25: **Rear side of the flexible supply unit with the main circuit breaker**

10.2 Key Switch

10.2.1 Master Key Switch on the Compact Supply Unit

There is a master key switch on the compact supply unit for protection against unauthorized use of the laser products. This master key switch is integrated in the interlock circuit. If the master key switch is in the "off" position, all laser beam paths are interrupted. Then no radiation from lasers integrated in the supply unit or the external lasers can reach the specimen area, even if the key switches of the external lasers are in the "on" position.

The master key switch for the compact supply unit is located on the front side of the unit (see **Figure 26**).

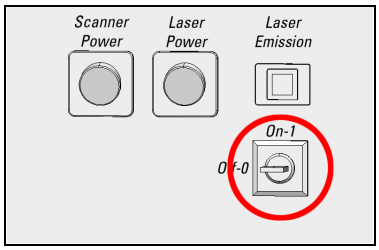

Figure 26: **Master key switch on the compact supply unit**

10.2.2 Master Key Switch on the Flexible Supply Unit

There is a master key switch on the flexible supply unit for protection against unauthorized use of the laser products. This master key switch is integrated in the interlock circuit. If the master key switch is in the "off" position, all laser beam paths are interrupted. Then no radiation from lasers integrated in the supply unit or the external lasers can reach the specimen area, even if the key switches of the external lasers are in the "on" position.

The master key switch for the flexible supply unit is located on the front side of the main switch board (see **Figure 27**).

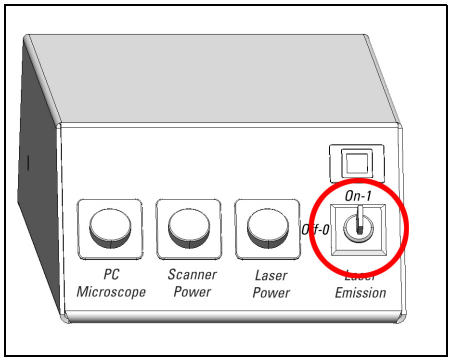

Figure 27: **Master key switch on the main switch board of the flexible supply unit**

10.2.3 Key Switch for the White Light Laser

The external lasers can also be turned off individually. The detachable key switch for protection against unauthorized use of the external white light laser is located on the front of the white light laser (see **Figure 28**).

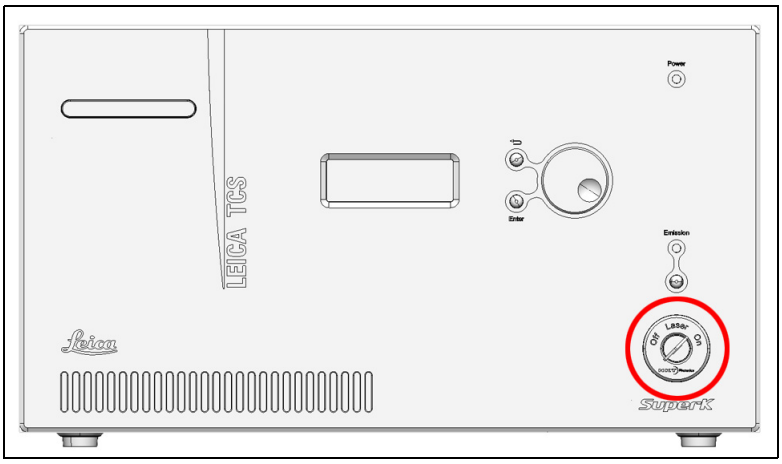

Figure 28: **Key switch for the white light laser**

10.2.4 Key Switch for UV Lasers

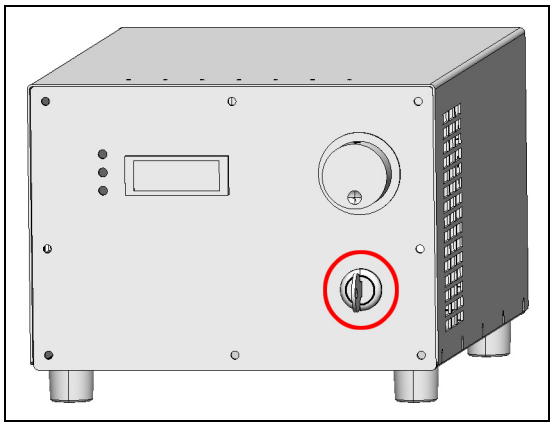

Figure 29: **Key switch on the power supply of external UV laser 355**

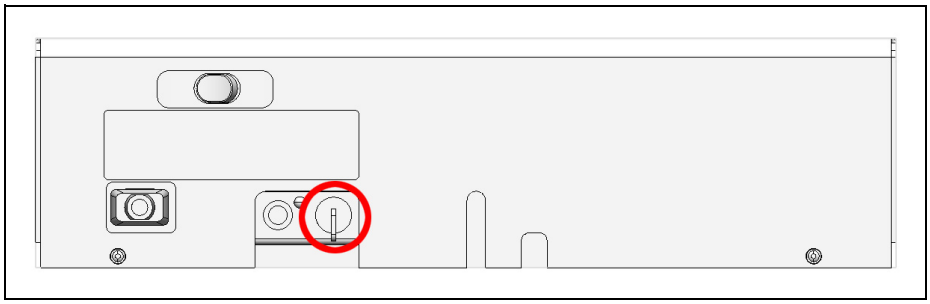

Figure 30: **Key switch on external UV laser 405**

10.2.5 Key Switches for Other External Lasers

Observe the user manuals for external lasers

Please refer to the information from the documents provided by the laser manufacturer for the external lasers. Pay particular attention to the laser manufacturer's notes!

10.3 Emission Warning Indicators

The operational readiness of lasers is signaled by an emission warning indicator.

WARNING **Possible risk of permanent eye and skin damage from laser radiation in the specimen plane**

As soon as the emission warning indicator of the lasers is lit, it is possible from a functional standpoint that laser radiation is present in the specimen area.

10.3.1 Emission Warning Indicator on the Supply Unit

The emission warning indicator on the supply unit is connected to the master key switch. If this is illuminated, there is the possibility of laser radiation in the specimen plane. If the master key switch is in the "off" position, the emission warning indicator on the supply unit goes out.

The emission warning indicator is located on the supply unit above the key switch, and it lights up in yellow (for compact supply units, see **Figure 31**, for flexible supply units see **Figure 32**).

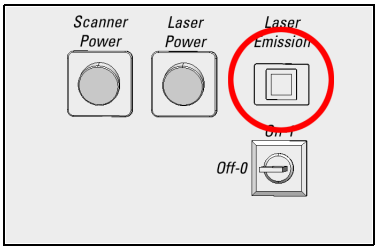

Figure 31: **Emission warning indicator on the compact supply unit**

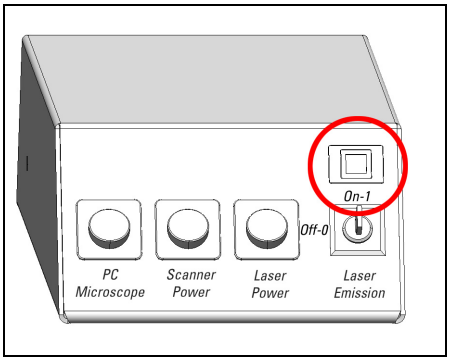

Figure 32: **Emission warning indicator on the main switch board of the flexible supply unit**

10.3.2 Emission Warning Indicator at the White Light Laser

The emission warning indicator of the achromatic light laser is located on the front of the achromatic light laser (see **Figure 33**) and is red when lit.

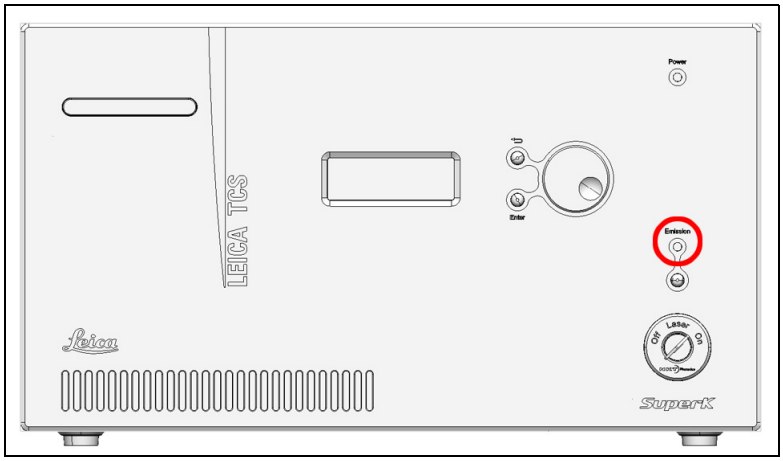

Figure 33: **Emission warning indicator at the white light laser**

10.3.3 Emission Warning Indicator on UV Lasers

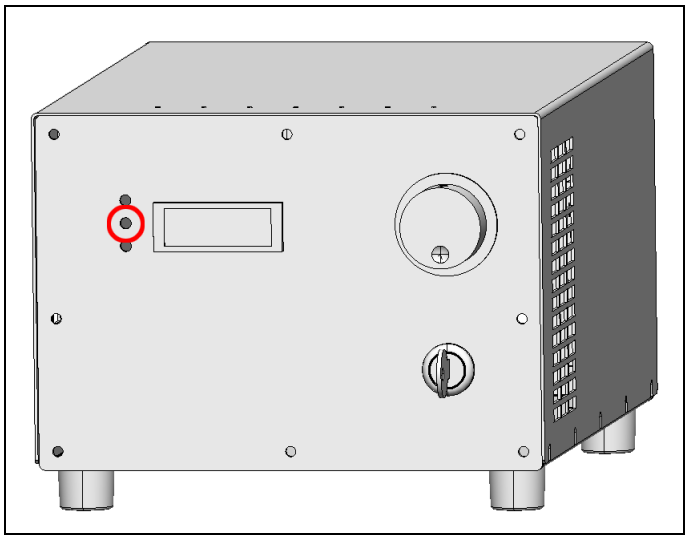

Figure 34: **Emission Warning Indicator on Power Supply of External UV Laser 355**

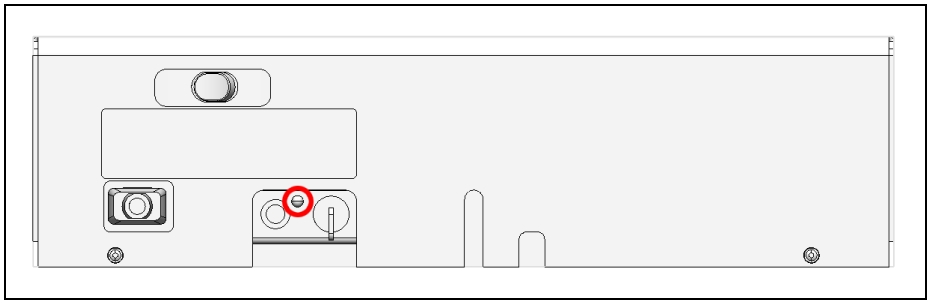

Figure 35: **Emission Warning Indicator on External UV Laser 405**

10.3.4 Emission Warning Indicator on Other External Lasers

Observe the user manuals for external lasers

Please refer to the information from the documents provided by the laser manufacturer for the external lasers. Pay particular attention to the laser manufacturer's notes!

10.3.5 Malfunction of Emission Warning Indicator

WARNING **Malfunction of emission warning indicator**

You must immediately disconnect the system from the power supply if any of the following occur:

- The emission warning indicator is not lit after being switched on using the detachable-key switch.
- The indicator continues to be lit after being switched off using the keyswitch
- Scanning of the specimen is not activated after being switched on properly (laser radiation in the specimen area).

If any of these occur, immediately notify the Leica branch office in your country or your local contact person.

10.4 Interlock Connectors

10.4.1 Interlock Connector on the Supply Unit

The interlock connector (plug connection for the remote-controlled safety "interlock") is on the rear side of the supply unit. Operating voltage is 12 V DC (for the flexible supply unit see **Figure 37**; for the compact supply unit see **Figure 36**).

The interlock connector on the supply unit has a shorting plug in its factory condition. The shorting plug is removable in order to connect a remote-controlled safety interlock (cable and safety switch). The laser beam path is interrupted if the contact is open. The safety

interlock can, for example. be connected to a door contact. When the door is opened, the laser beam is then interrupted automatically.

The total length of the cable must not exceed 10 m. If a large amount of electromagnetic interference (EMC) is expected in the environment, use a shielded cable with a shielded plug.

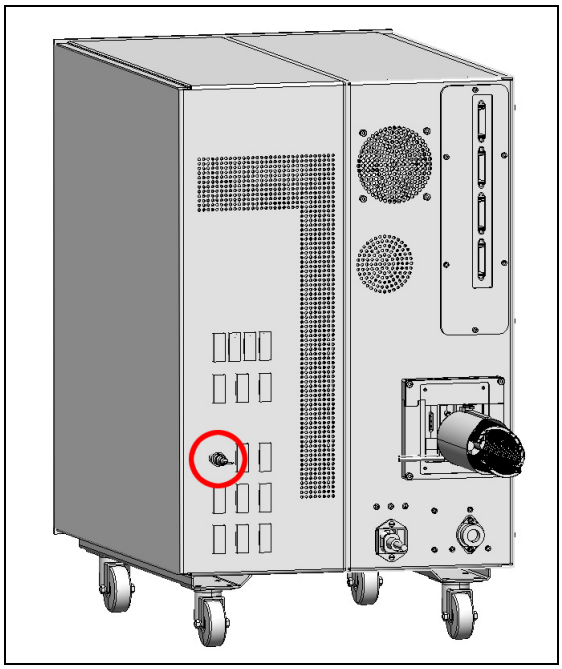

Figure 36: Interlock connector on the compact supply unit

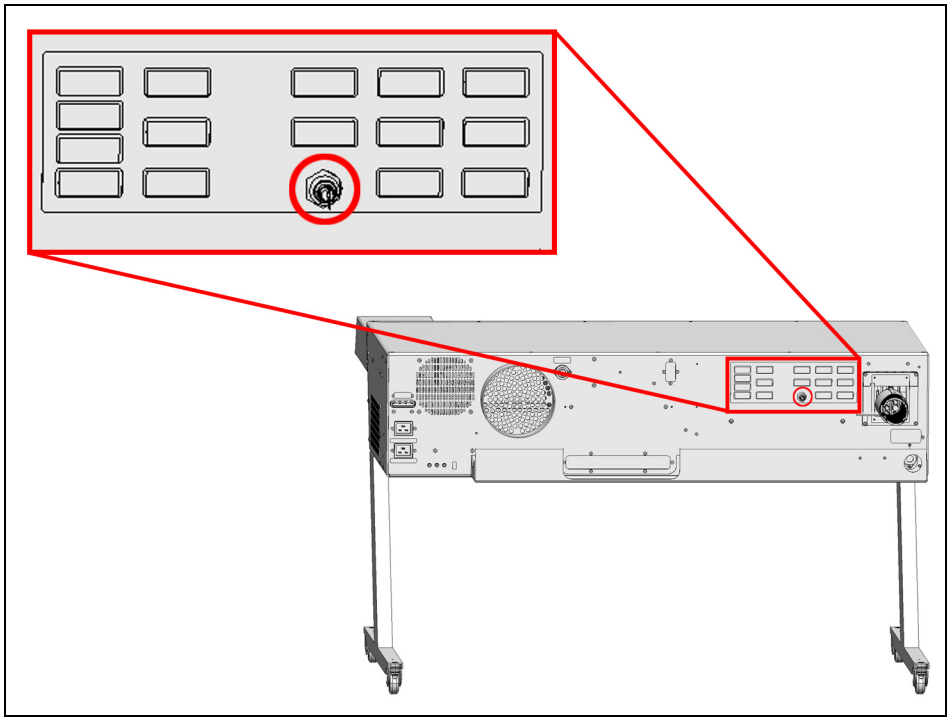

Figure 37: Interlock connector on the rear side of the flexible supply unit

10.4.2 Interlock Connector on the White Light Laser

The interlock connector is located on the rear side of the white light laser (12 V DC operating voltage, see **Figure 38**).

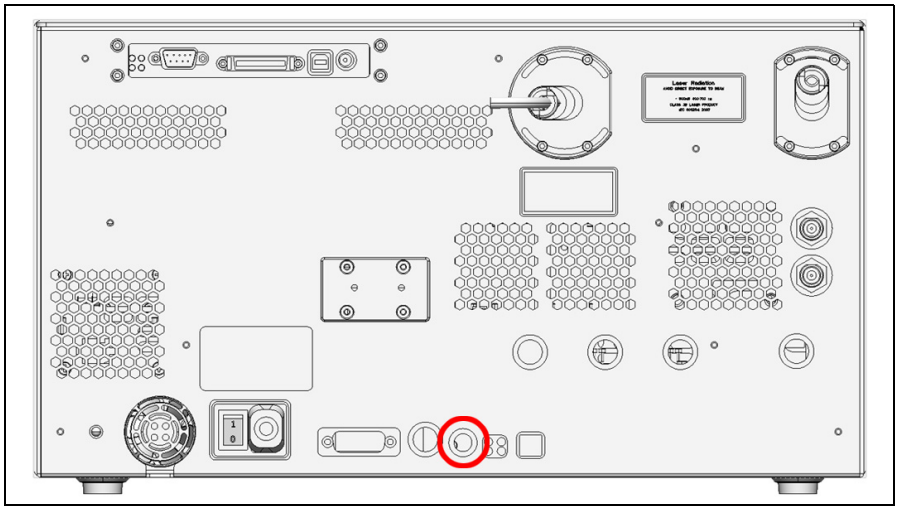

Figure 38: Interlock Connector on the White Light Laser

Interlock connector when using the white light laser

If the white light laser is operated as a component of the TCS SP8 X system, you have to use the interlock connector on the supply unit! The shorting plug must be connected to the interlock connector of the white light laser.

If you operate the white light laser separately (without connecting it to the TCS SP8 system), you have to use the interlock connector on the white light laser for connecting remote interlocks.

Remote interlock devices such as those connected to the room, the door or other onsite safety interlock systems can also be connected to the remote interlock connector. The laser beam path is interrupted if the contact is open.

10.4.3 Interlock Connector on Other External Lasers

Observe the user manuals for external lasers

Please refer to the information from the documents provided by the laser manufacturer for the external lasers. Pay particular attention to the laser manufacturer's notes!

10.4.4 Interlock Connector on the Scan Head

The interlock connector is located on the rear side of the scan head (operating voltage: 12 V DC, see **Figure 39**).

For laser safety reasons, the inverted microscope must be connected to this connection or, if an upright microscope is used, to the mirror housing. This ensures that the microscope safety switch is integrated in the interlock circuit.

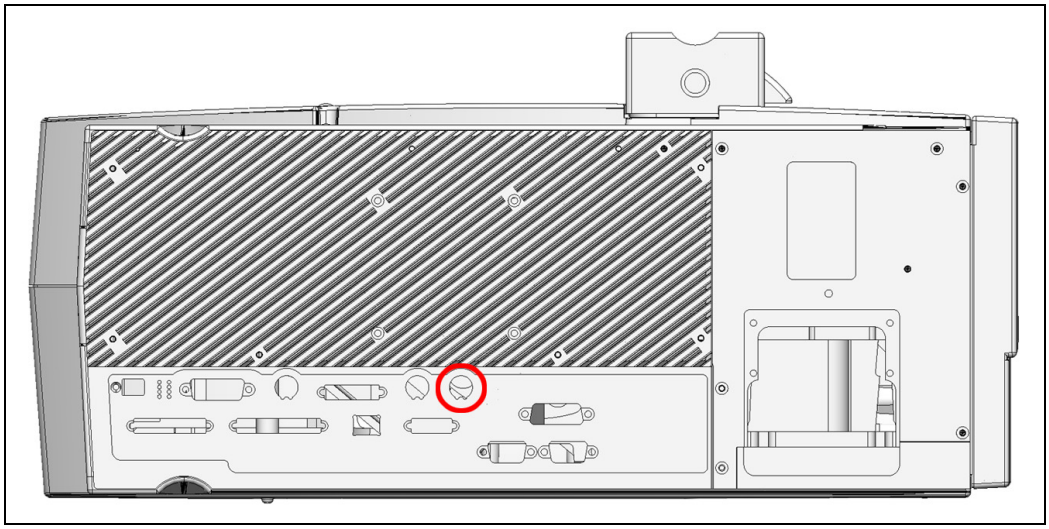

Figure 39: Position of the interlock connector on the scan head

10.5 Safety Switches on the Microscope

When the safety switches are triggered, the light path of the laser beam is interrupted.

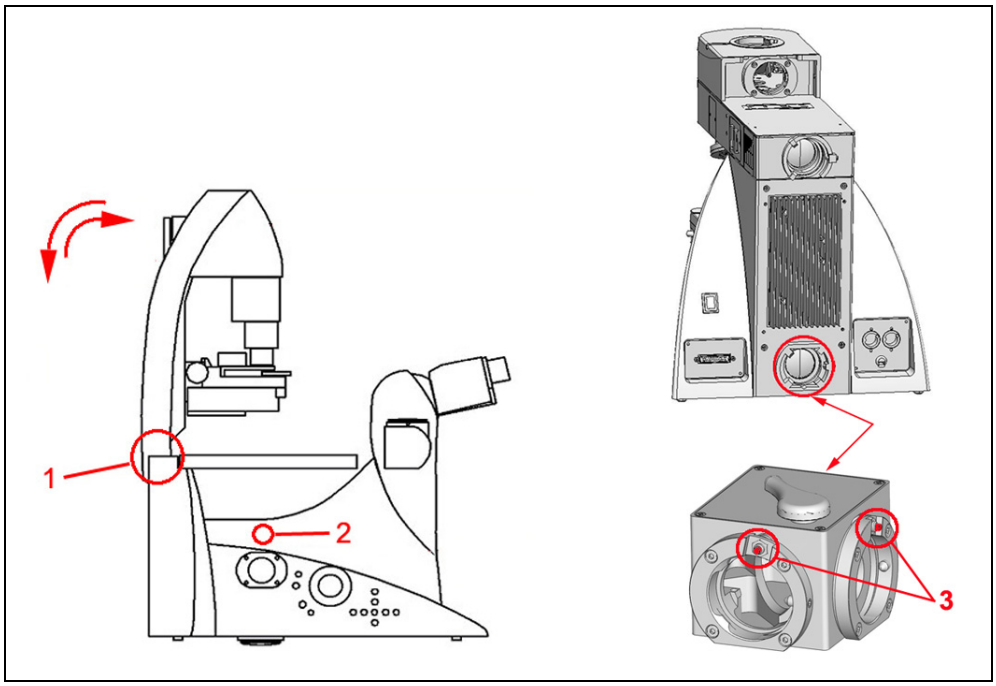

Figure 40: **Safety switches (1) and (2) on the inverted microscope (left); Safety switches (3) on the mirror housing for the upright microscope (right)**

Position of the safety switch	Is triggered by	Is triggered if	Function
1	Transmitted-light illuminator arm	The illuminator arm is tilted (e.g. for working on the specimen)	Prevents laser light while working on the specimen
2	Motorized changeover from eyepiece mode to scan mode	The path-folding mirror for the scan head is swung out by motor	Prevents stray light in the eyepiece if the user switches from eyepiece observation to confocal observation
3	Pushbutton in the port apertures of the mirror housing	One of the two apertures on the mirror housing is free (no external detector, no halogen lamps, no cover)	Prevents the escape of laser light if the user removes components from the mirror housing.

10.6 Warning Messages

- **Warning messages in the event of a defective shutter:** The shutters are monitored for safety. If one of the shutters is defective or not functioning properly, a warning message is shown on the monitor within the LAS AF. For safety reasons, the shutters remain closed. No further use of the laser is possible. In this situation, the system must not be operated. Contact the Leica branch office in your country or your contact person.

- **Audible warning signal in the case of defective parts in the shutter safety circuit:** If a part in the shutter safety circuit is defective, a tone **sounds at intervals**. For safety reasons, the shutters remain closed. No further use of the laser is possible. In this situation, the system must not be operated. Contact the Leica branch office in your country or your contact person.
- **Audible warning signal in case of defective laser emission indicator port:** The relay contact for the laser emission indicator port is safety monitored. If the relay fails, an **audible warning signal sounds at regular intervals**. Notify Leica Service immediately. If a laser emission indicator is connected to the laser emission indicator port, the system may not be operated.
- **Audible warning signal during automatic firmware update:** During the update of the firmware, a **continuous tone sounds**. After the updated component is automatically restarted, the signal stops. During the automatic update and the automatic restart of the component, you may not switch off or restart the system, since otherwise this can lead to damage to the system.

10.7 Special Laser Safety Equipment

10.7.1 Laser Protection Tube and Laser Protection Shield

The laser protection tube and the laser protection shield are used in inverted microscopes for protection from laser radiation (see **Figure 41**).

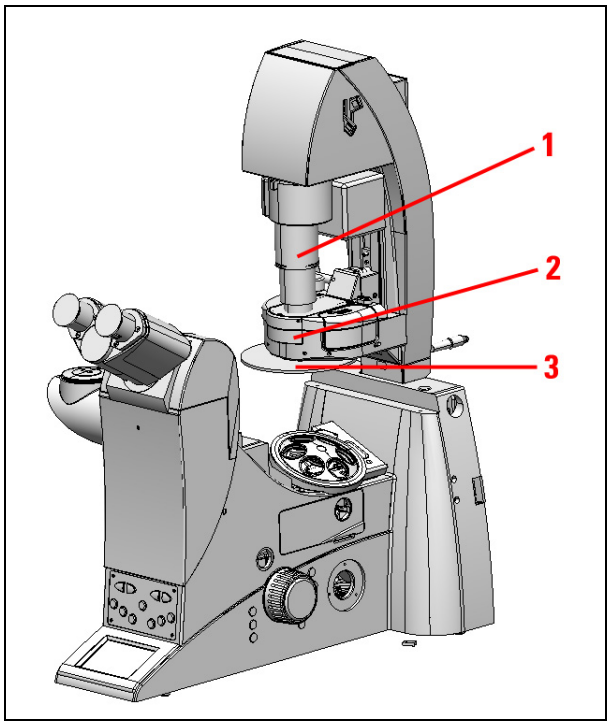

Figure 41: Inverted microscope

1 Laser Protection Tube
2 Condenser Base
3 Laser Protection Shield

Reordering a Condenser Base:

When reordering a condenser base (see **Figure 41, item 2**), be sure to note that the condenser base is supplied without a laser protection shield (see **Figure 41, item 3**).

The existing laser protection shield (see **Figure 41, item 3**) must always be reinstalled. Please consult the microscope's user manual provided.

Condenser Base with Filter Holder:

When using a condenser base with filter holder, always make sure that unused filter holders are swung out of the beam path, and that the laser protection tube covers the beam path.

When equipping multiple filter holders with filters, do so from bottom to top so that the laser protection tube can cover the beam path to the greatest possible extent. Do not swing in the filters during the scanning operation.

10.7.2 Safety Beam Guide on the TCS SP8 MP

The light of all employed VIS lasers (wavelength range 400 - 700 nm, visible spectrum) and UV lasers (wavelength range < 400 nm, invisible) is fed through a fiber optic cable and, therefore, completely shielded until it leaves the microscope objective and reaches the specimen.

For systems with infrared laser (wavelength range > 700 nm), the beam is passed through a safety beam guide and, if necessary, also passed through a fiber optic cable (see **Figure 42**). This completely shields the laser beam until it leaves the microscope objective and reaches the specimen.

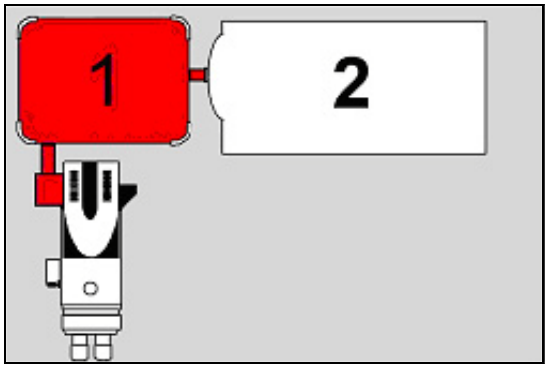

Figure 42: Safety beam guide (1) and IR laser (2)

11 Safety Labels on the System

The corresponding safety labels depend on the laser configuration (VIS, UV, MP); they are attached in either English or German at the following locations.

WARNING	**Permanent eye and skin damage from failure to observe the safety labels on the system** Make sure that the safety labels shown in the User Manual are attached to the system. Safety labels may not be removed. Missing or damaged safety labels must be attached immediately and at the described location. Operation without the safety labels shown is not permitted. If you have any further questions, contact your laser safety officer or the Leica branch office in your country immediately.

11.1 Inverted microscope

Rear view of microscope:

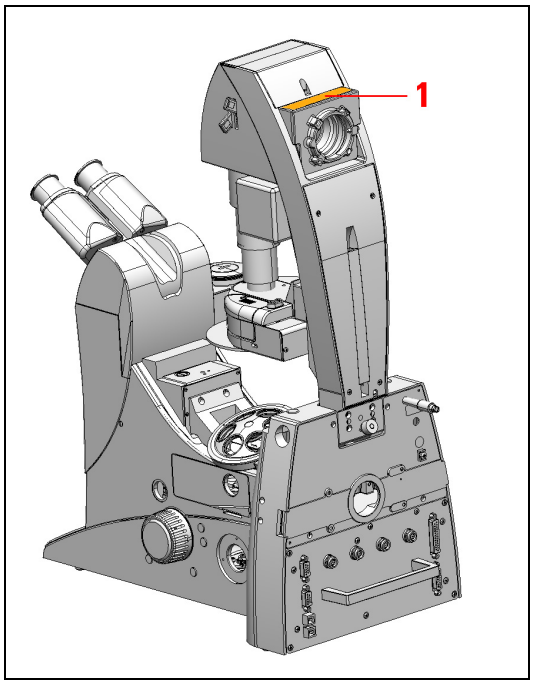

Figure 43: Safety labels for the inverted microscope

Position	System	Safety label in English	Safety label in German
1	VIS	DANGER LASER RADIATION CLASS 3B WHEN OPEN AVOID EXPOSURE TO BEAM	VORSICHT LASERSTRAHLUNG KLASSE 3B WENN ABDECKUNG GEÖFFNET NICHT DEM STRAHL AUSSETZEN
	UV	DANGER VISIBLE AND INVISIBLE LASER RADIATION CLASS 3B WHEN OPEN AVOID EXPOSURE TO BEAM	VORSICHT SICHTBARE UND UNSICHTBARE LASERSTRAHLUNG KLASSE 3B WENN ABDECKUNG GEÖFFNET NICHT DEM STRAHL AUSSETZEN
	MP	DANGER VISIBLE AND INVISIBLE LASER RADIATION CLASS 4 WHEN OPEN AVOID EYE OR SKIN EXPOSURE TO DIRECT OR SCATTERED RADIATION	VORSICHT SICHTBARE UND UNSICHTBARE LASERSTRAHLUNG KLASSE 4 WENN ABDECKUNG GEÖFFNET BESTRAHLUNG VON AUGE ODER HAUT DURCH DIREKTE ODER STREUSTRAHLUNG VERMEIDEN

Table 1: Safety labels for the inverted microscope (see Figure 43)

Front view of the microscope:

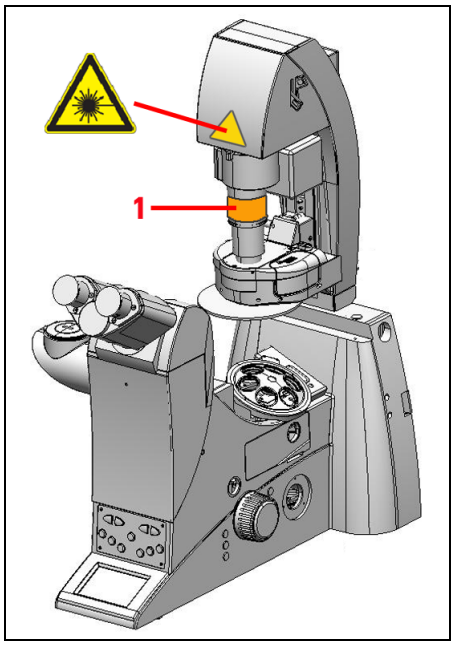

Figure 44: Safety labels for the inverted microscope

Position	System	Safety label in English	Safety label in German
1	VIS	LASER RADIATION IS EMITTED FROM THIS APERTURE AVOID EXPOSURE	AUSTRITT VON LASERSTRAHLUNG BESTRAHLUNG VERMEIDEN
	UV/MP	VISIBLE AND INVISIBLE LASER RADIATION IS EMITTED FROM THIS APERTURE AVOID EXPOSURE	AUSTRITT VON SICHTBARER UND UNSICHTBARER LASERSTRAHLUNG BESTRAHLUNG VERMEIDEN

Table 2: Safety labels for the inverted microscope (see Figure 44)

11.2 Upright Microscope

Rear view of microscope:

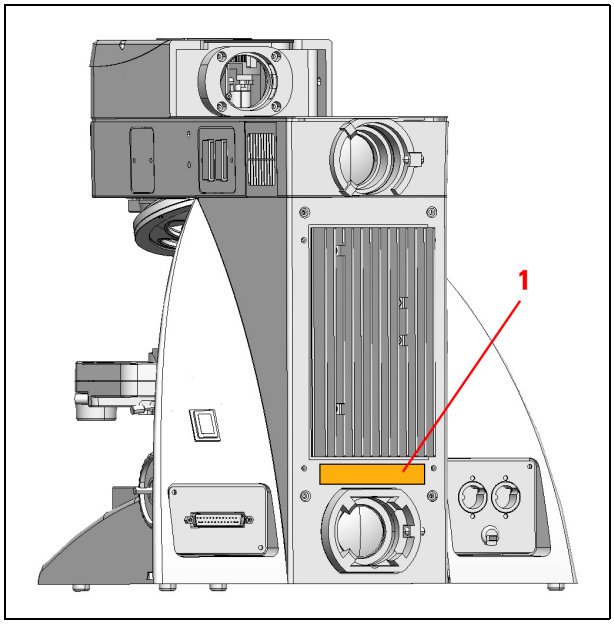

Figure 45: Safety labels for the upright microscope

Position	System	Safety label in English	Safety label in German
1	VIS	DANGER LASER RADIATION CLASS 3B WHEN OPEN AVOID EXPOSURE TO BEAM	VORSICHT LASERSTRAHLUNG KLASSE 3B WENN ABDECKUNG GEÖFFNET NICHT DEM STRAHL AUSSETZEN
	UV	DANGER VISIBLE AND INVISIBLE LASER RADIATION CLASS 3B WHEN OPEN AVOID EXPOSURE TO BEAM	VORSICHT SICHTBARE UND UNSICHTBARE LASERSTRAHLUNG KLASSE 3B WENN ABDECKUNG GEÖFFNET NICHT DEM STRAHL AUSSETZEN
	MP	DANGER VISIBLE AND INVISIBLE LASER RADIATION CLASS 4 WHEN OPEN AVOID EYE OR SKIN EXPOSURE TO DIRECT OR SCATTERED RADIATION	VORSICHT SICHTBARE UND UNSICHTBARE LASERSTRAHLUNG KLASSE 4 WENN ABDECKUNG GEÖFFNET BESTRAHLUNG VON AUGE ODER HAUT DURCH DIREKTE ODER STREUSTRAHLUNG VERMEIDEN

Table 3: Safety labels for the upright microscope (see Figure 45)

Front view of the microscope:

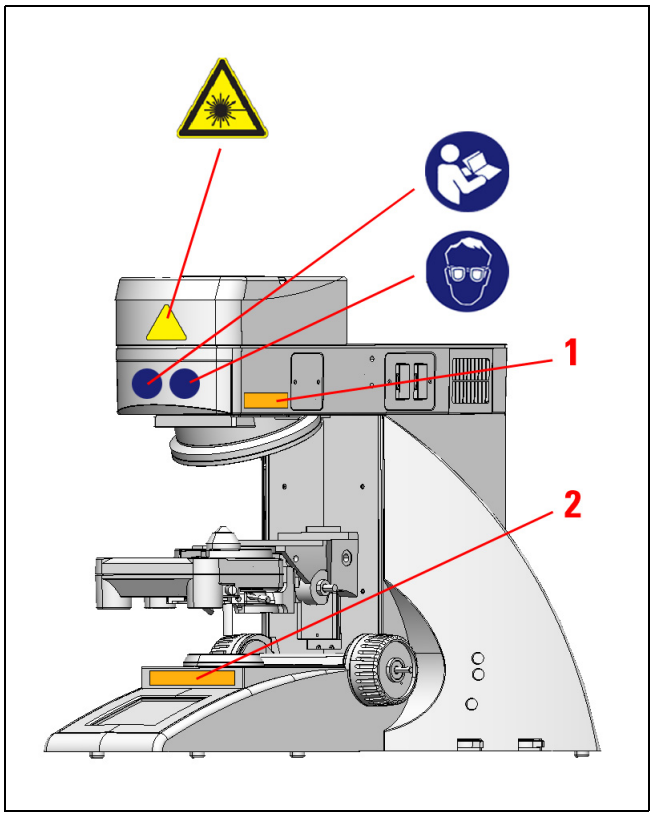

Figure 46: Safety labels for the upright microscope

Position	System	Safety label in English	Safety label in German
1 and 2	VIS	LASER RADIATION IS EMITTED FROM THIS APERTURE AVOID EXPOSURE	AUSTRITT VON LASERSTRAHLUNG BESTRAHLUNG VERMEIDEN
	UV/MP	VISIBLE AND INVISIBLE LASER RADIATION IS EMITTED FROM THIS APERTURE AVOID EXPOSURE	AUSTRITT VON SICHTBARER UND UNSICHTBARER LASERSTRAHLUNG BESTRAHLUNG VERMEIDEN

Table 4: Safety labels for the upright microscope (see Figure 46)

11.3 Scan Head

Front view of the scan head:

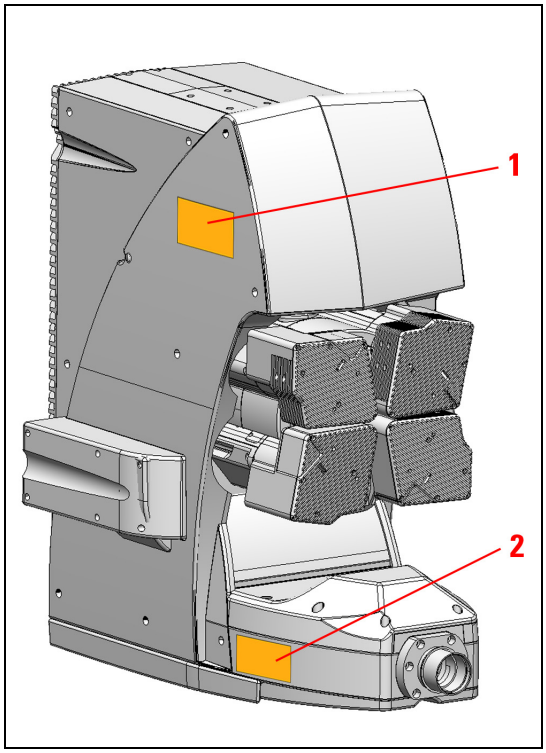

Figure 47: Safety labels on the scan head

Position	System	Safety label in English	Safety label in German
1	VIS	DANGER LASER RADIATION CLASS 3B WHEN OPEN AVOID EXPOSURE TO BEAM	VORSICHT LASERSTRAHLUNG KLASSE 3B WENN ABDECKUNG GEÖFFNET NICHT DEM STRAHL AUSSETZEN
	UV	DANGER VISIBLE AND INVISIBLE LASER RADIATION CLASS 3B WHEN OPEN AVOID EXPOSURE TO BEAM	VORSICHT SICHTBARE UND UNSICHTBARE LASERSTRAHLUNG KLASSE 3B WENN ABDECKUNG GEÖFFNET NICHT DEM STRAHL AUSSETZEN
	MP	DANGER VISIBLE AND INVISIBLE LASER RADIATION CLASS 4 WHEN OPEN AVOID EYE OR SKIN EXPOSURE TO DIRECT OR SCATTERED RADIATION	VORSICHT SICHTBARE UND UNSICHTBARE LASERSTRAHLUNG KLASSE 4 WENN ABDECKUNG GEÖFFNET BESTRAHLUNG VON AUGE ODER HAUT DURCH DIREKTE ODER STREUSTRAHLUNG VERMEIDEN
2	VIS	LASER RADIATION AVOID DIRECT EXPOSURE TO BEAM < 500mW 400-700nm CLASS 3B LASER PRODUCT IEC 60825-1: 2007	LASERSTRAHLUNG NICHT DEM STRAHL AUSSETZEN < 500mW 400-700nm LASER KLASSE 3B IEC 60825-1: 2007
	UV	LASER RADIATION VISIBLE AND INVISIBLE - CLASS 3B AVOID DIRECT EXPOSURE TO BEAM < 500mW 350-700nm IEC 60825-1: 2007	LASERSTRAHLUNG SICHTBAR UND UNSICHTBAR - KLASSE 3B NICHT DEM STRAHL AUSSETZEN < 500mW 350-700nm IEC 60825-1: 2007
	MP	LASER RADIATION VISIBLE AND INVISIBLE - CLASS 4 AVOID EYE OR SKIN EXPOSURE TO DIRECT OR SCATTERED RADIATION P< 4W 350-1600nm >80fs IEC 60825-1:2007	LASERSTRAHLUNG SICHTBAR UND UNSICHTBAR - KLASSE 4 BESTRAHLUNG VON AUGE ODER HAUT DURCH DIREKTE ODER STREUSTRAHLUNG VERMEIDEN P< 4W 350-1600nm >80fs IEC 60825-1:2007

Table 5: Safety Labels on the Scan Head (see Figure 47)

11.4 Compact Supply Unit

View of the compact supply unit:

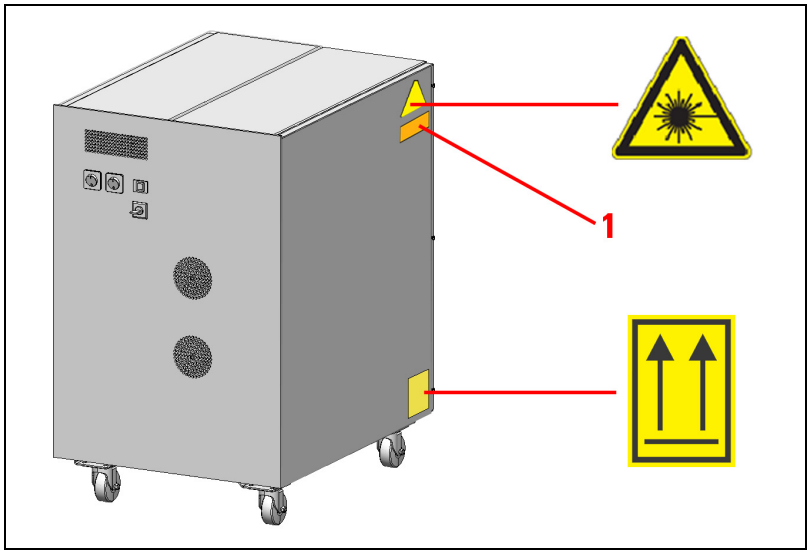

Figure 48: **Safety labels on the compact supply unit**

Position	Safety label in English	Safety label in German
1	DANGER LASER RADIATION CLASS 3B WHEN OPEN AVOID EXPOSURE TO BEAM	VORSICHT LASERSTRAHLUNG KLASSE 3B WENN ABDECKUNG GEÖFFNET NICHT DEM STRAHL AUSSETZEN

Table 6: **Safety Labels on the Compact Supply Unit (see Figure 48)**

11.5 Flexible Supply Unit

View of the flexible supply unit:

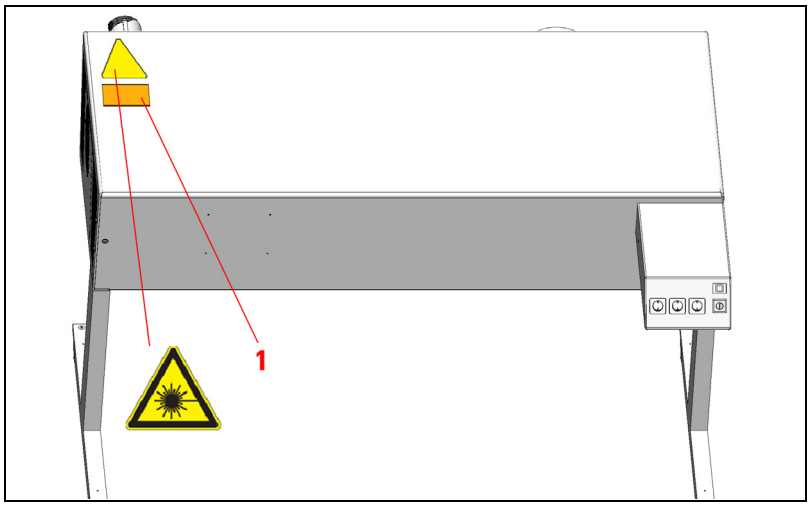

Figure 49: **Safety labels on the flexible supply unit**

Position	Safety label in English	Safety label in German
1	DANGER LASER RADIATION CLASS 3B WHEN OPEN AVOID EXPOSURE TO BEAM	VORSICHT LASERSTRAHLUNG KLASSE 3B WENN ABDECKUNG GEÖFFNET NICHT DEM STRAHL AUSSETZEN

Table 7: Safety Labels on the Flexible Supply Unit (see Figure 49)

11.6 MP Beam Coupling Unit

Angled front view of the right side of the MP beam coupling unit:

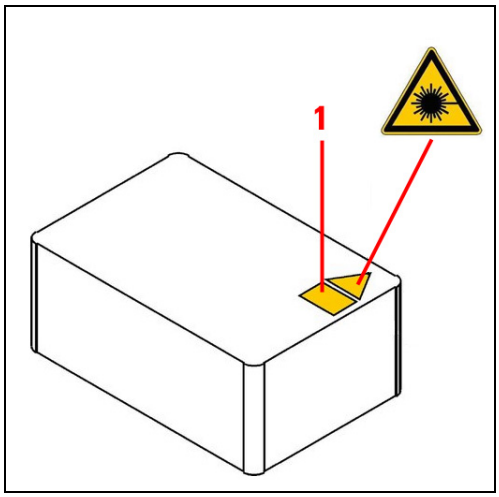

Figure 50: Safety label for the MP beam coupling unit (top side)

Position	Safety label in English	Safety label in German
1	DANGER VISIBLE AND INVISIBLE LASER RADIATION CLASS 4 WHEN OPEN AVOID EYE OR SKIN EXPOSURE TO DIRECT OR SCATTERED RADIATION	VORSICHT SICHTBARE UND UNSICHTBARE LASERSTRAHLUNG KLASSE 4 WENN ABDECKUNG GEÖFFNET BESTRAHLUNG VON AUGE ODER HAUT DURCH DIREKTE ODER STREUSTRAHLUNG VERMEIDEN

Table 8: Safety label for the MP beam coupling unit (top) (see Figure 50)

11.7 Cover for replacement flange

Front view of the cover:

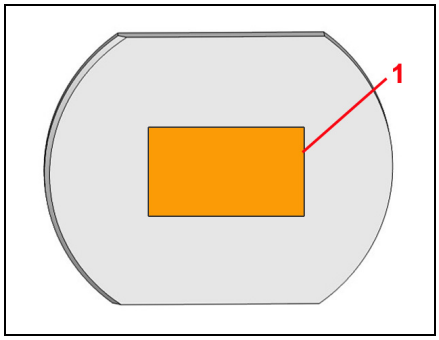

Figure 51: Safety labels on the cover

Position	System	Safety label in English	Safety label in German
1	VIS	DANGER LASER RADIATION CLASS 3B WHEN OPEN AVOID EXPOSURE TO BEAM	VORSICHT LASERSTRAHLUNG KLASSE 3B WENN ABDECKUNG GEÖFFNET NICHT DEM STRAHL AUSSETZEN
	UV	DANGER VISIBLE AND INVISIBLE LASER RADIATION CLASS 3B WHEN OPEN AVOID EXPOSURE TO BEAM	VORSICHT SICHTBARE UND UNSICHTBARE LASERSTRAHLUNG KLASSE 3B WENN ABDECKUNG GEÖFFNET NICHT DEM STRAHL AUSSETZEN
	MP	DANGER VISIBLE AND INVISIBLE LASER RADIATION CLASS 4 WHEN OPEN AVOID EYE OR SKIN EXPOSURE TO DIRECT OR SCATTERED RADIATION	VORSICHT SICHTBARE UND UNSICHTBARE LASERSTRAHLUNG KLASSE 4 WENN ABDECKUNG GEÖFFNET BESTRAHLUNG VON AUGE ODER HAUT DURCH DIREKTE ODER STREUSTRAHLUNG VERMEIDEN

Table 9: Safety Labels on the Cover (see Figure 51)

If the replacement flange for transmitted light is not equipped with a functional module, such as a lamp housing, a cover must be placed over the opening for laser safety reasons.

11.8 Mirror Housing

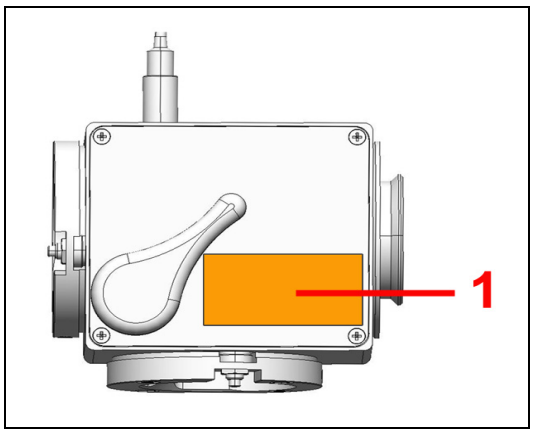

Figure 52: **Safety label on the mirror housing (top)**

Position	System	Safety label in English	Safety label in German
1	VIS	DANGER LASER RADIATION CLASS 3B WHEN OPEN AVOID EXPOSURE TO BEAM	VORSICHT LASERSTRAHLUNG KLASSE 3B WENN ABDECKUNG GEÖFFNET NICHT DEM STRAHL AUSSETZEN
	UV	DANGER VISIBLE AND INVISIBLE LASER RADIATION CLASS 3B WHEN OPEN AVOID EXPOSURE TO BEAM	VORSICHT SICHTBARE UND UNSICHTBARE LASERSTRAHLUNG KLASSE 3B WENN ABDECKUNG GEÖFFNET NICHT DEM STRAHL AUSSETZEN
	MP	DANGER VISIBLE AND INVISIBLE LASER RADIATION CLASS 4 WHEN OPEN AVOID EYE OR SKIN EXPOSURE TO DIRECT OR SCATTERED RADIATION	VORSICHT SICHTBARE UND UNSICHTBARE LASERSTRAHLUNG KLASSE 4 WENN ABDECKUNG GEÖFFNET BESTRAHLUNG VON AUGE ODER HAUT DURCH DIREKTE ODER STREUSTRAHLUNG VERMEIDEN

Table 10: **Safety label on the mirror housing (see Figure 52)**

11.9 White light laser

Rear side of white light laser:

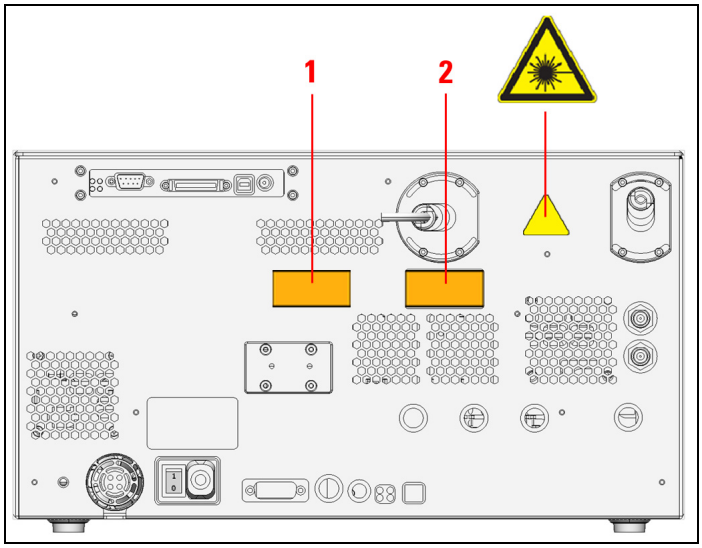

Figure 53: Safety label on the rear side of the white light laser

Position	Safety label in English	Safety label in German
1	DANGER LASER RADIATION CLASS 3B WHEN OPEN AVOID EXPOSURE TO BEAM	VORSICHT LASERSTRAHLUNG KLASSE 3B WENN ABDECKUNG GEÖFFNET NICHT DEM STRAHL AUSSETZEN
2	LASER RADIATION AVOID DIRECT EXPOSURE TO BEAM < 500mW 400-700nm CLASS 3B LASER PRODUCT IEC 60825-1: 2007	LASERSTRAHLUNG NICHT DEM STRAHL AUSSETZEN < 500mW 400-700nm LASER KLASSE 3B IEC 60825-1: 2007

Table 11: Safety Label on the Rear Side of the White Light Laser (see Figure 53)

11.10 External UV Laser

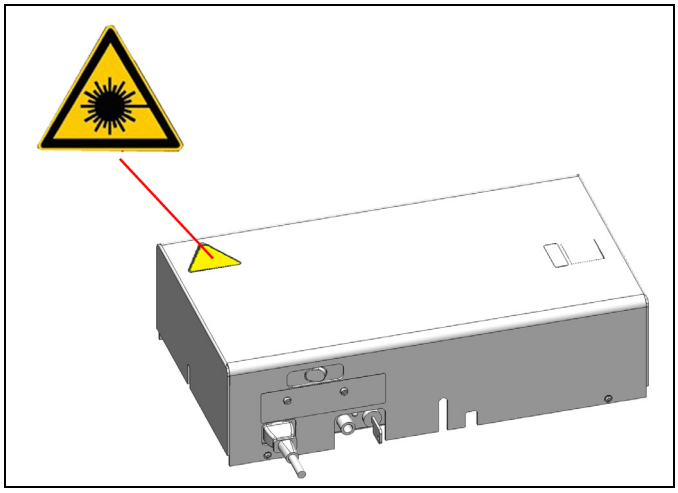

Figure 54: Safety Label on External UV Laser 405

11.11 Other External Lasers

Observe the user manuals for external lasers

Please refer to the information from the documents provided by the laser manufacturer for the external lasers. Pay particular attention to the laser manufacturer's notes!

12 Switching On the System

The TCS SP8 and TCS SP8 MP systems are available with a flexible or compact supply unit. Observe the switch-on sequence that applies to your supply unit.

NOTICE	**Damage is possible when contacting the specimen stage** When using an inverted microscope, the illuminator arm must be swung back before the system start and LAS AF start because the stage can damage the condenser, the objective or the specimen during initialization.

NOTICE	**Objective damage is possible when contacting the specimen stage** When using an upright microscope, the specimen stage must be moved down before the system start and LAS AF start because it could come into contact with the objective during initialization and damage the objective.

12.1 TCS SP8/SP8 X with Flexible Supply Unit

Observe the user manuals for external lasers

Please refer to the information from the documents provided by the laser manufacturer for the external lasers. Pay particular attention to the laser manufacturer's notes!

1. Switch on the cooling for the infrared laser (**see Figure 55, item 1**). The cooling requires approx. 4 hours to regulate the temperature of the infrared laser.
2. After 4 hours, switch on the supply unit for the infrared laser (**see Figure 55, item 2**).

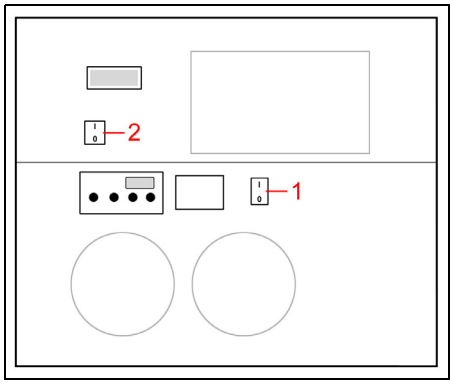

Figure 55: Cooling and supply unit of the "InSight DeepSee" infrared laser

3. If you are using a fluorescence lamp EL6000, switch it on first.

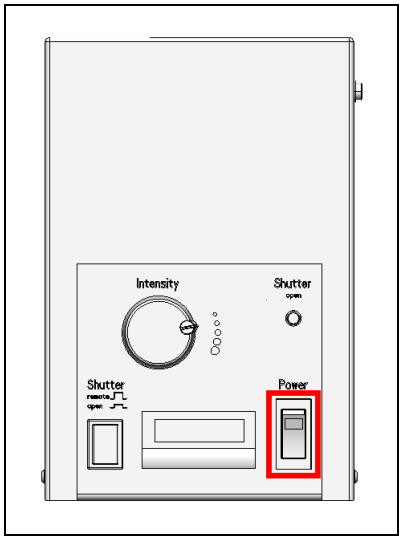

Figure 56: EL6000

4. If you are using a HyD RLD, switch it on at its supply unit (see **Figure 78**). You can find additional information on the HyD RLD in **Chapter 12.3**.
5. Switch on the workstation and the microscope on the main switch board of the flexible supply unit (see **Figure 57, item 1**). You do not have to start the operating system—it starts automatically when you switch on the workstation. Wait until the startup process has concluded.

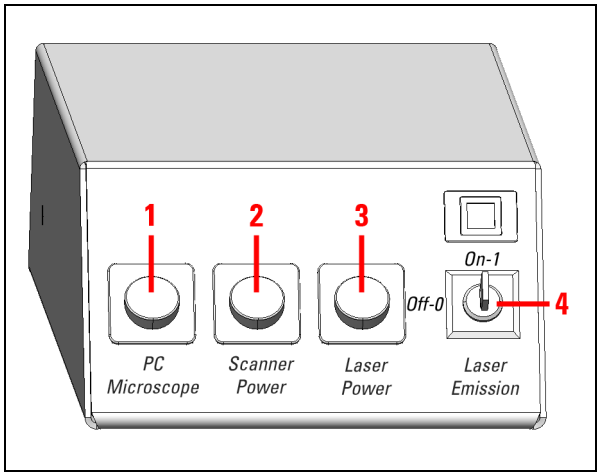

Figure 57: Overview of the main switch board on the flexible supply unit

6. Check whether the microscope is switched on. The microscope is operational once the readiness indicator (**Figure 58, item 1**) on the toggle switch is lit up. If the readiness indicator is not lit, activate the electronics box toggle switch (**Figure 58, item 2**).

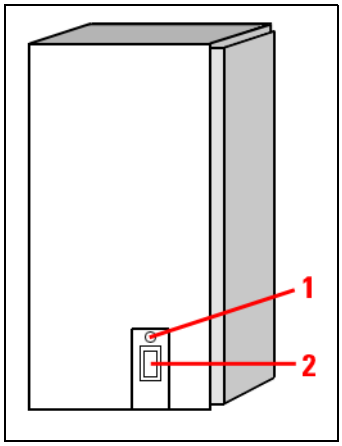

Figure 58: Microscope electronics box

7. Switch on the microscope's control panel:

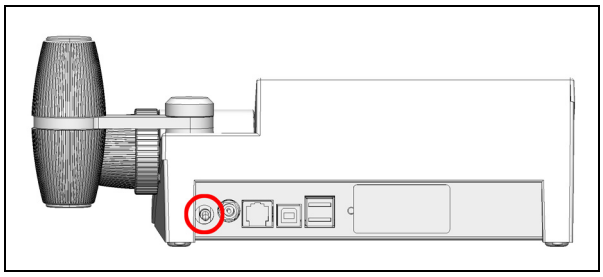

Figure 59: Control panel for the microscope

8. If your system has an infrared laser (MP) or an optical parametric oscillator (OPO), switch on the NDD detection unit.

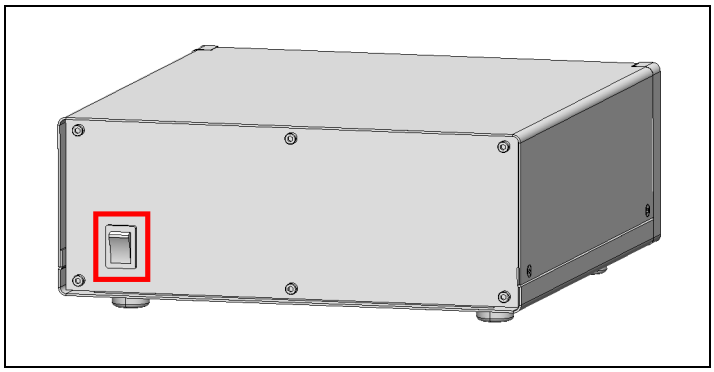

Figure 60: Switch on the NDD detection unit

9. Switch on the scan head on the flexible supply unit's main switch board (see **Figure 57, item 2**).
10. Switch on the lasers on the main switch board of the flexible supply unit (see **Figure 57, item 3**).

The power supplies and fan of the system have now been started.

11. If your system has an infrared laser (MP) or an optical parametric oscillator (OPO), switch on these components as described in the manufacturer's respective user

manual.

12. If your system has a white light laser, check whether the white light laser's power supply is switched on: The white light laser's power supply is switched on if the power switch on the rear side of the white light laser is at "On".

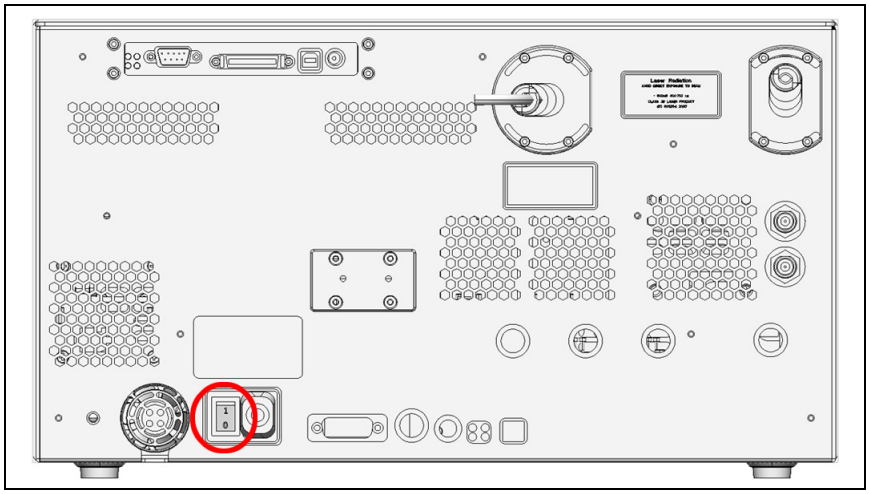

Figure 61: Power switch on the rear side of the white light laser

13. To switch on the laser in the supply unit, activate the key switch on the main switch board of the flexible supply unit (see **Figure 57, item 4**).

WARNING	**Risk of permanent eye and skin damage from laser radiation**
	From this time on, laser radiation may be present in the specimen area of the laser scanning microscope. Make sure to follow the safety notes for operation of the system.

14. To switch on the white light laser, activate the key switch on the front side of the white light laser:

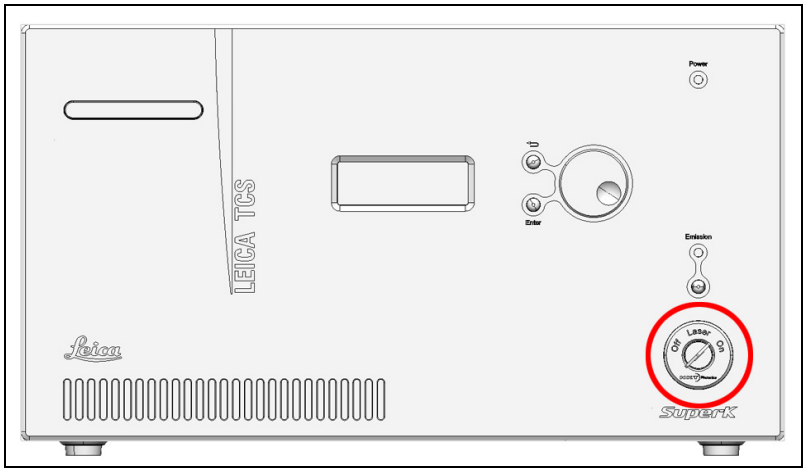

Figure 62: Key switch for the white light laser

White light laser error messages

An error report appears on the display of the white light laser:

- If the room temperature exceeds 40°C -> the white light laser switches itself off and can only be turned back on after the room cools off.
- In case of mechanical shock or vibrations -> switch off the white light laser and turn it back on after 10 seconds.

15. If you are using external 355 nm UV laser including 405 nm wavelength, make sure that the power switch is in the "On" position.

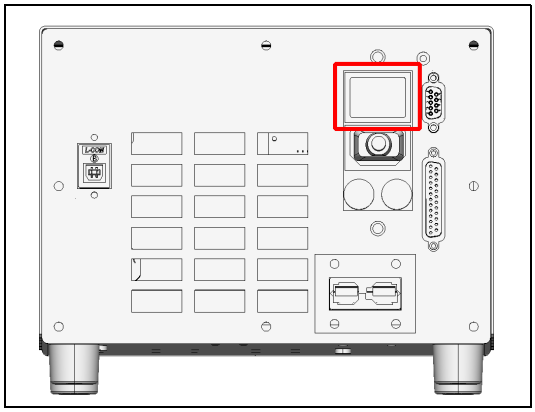

Figure 63: Power switch on external 355 nm UV laser

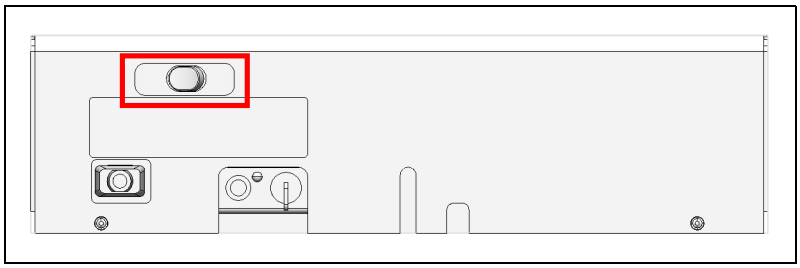

Figure 64: Power switch on external 405 nm UV laser

16. Activate the following key switches to switch on the external 355 nm and 405 nm UV laser.

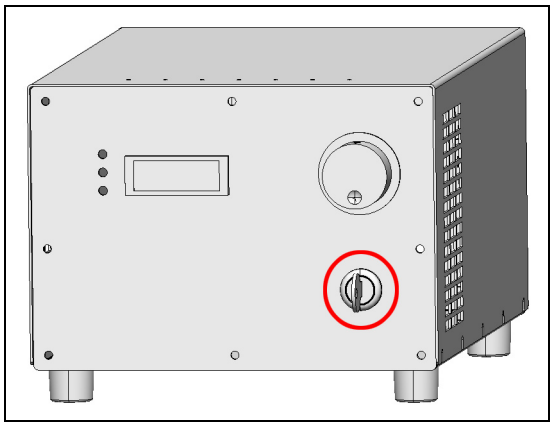

Figure 65: Key switch on the power supply of external 355 nm UV laser

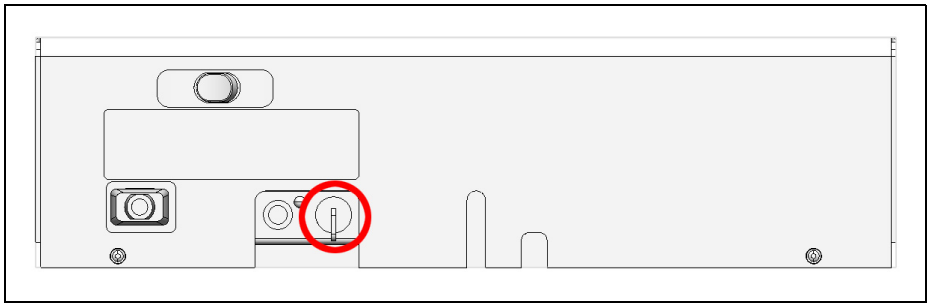

Figure 66: **Key switch on the external 405 nm UV laser**

17. After the workstation has started, log on to the operating system.

Using a personalized user ID

Use your personal user ID if one has been set up. This ensures that user-specific settings are saved and maintained for this user only. If the system administrator has not yet assigned a personal user ID, log on as "TCS_User". The default password is "True!Confocal55".

Change password

After logging on with your own user ID, you may change your password. To do so, press the **Ctrl**, **Alt** and **Del** keys at the same time.
Then, click **Change password**. The **Change password** dialog box opens.

Now you can start the LAS AF software.

12.2 TCS SP8 with Compact Supply Unit

Observe the user manuals for external lasers

Please refer to the information from the documents provided by the laser manufacturer for the external lasers. Pay particular attention to the laser manufacturer's notes!

1. Switch on the cooling for the infrared laser (**see Figure 67, item 1**). The cooling requires approx. 4 hours to regulate the temperature of the infrared laser.

2. After 4 hours, switch on the supply unit for the infrared laser (**see Figure 67, item 2**).

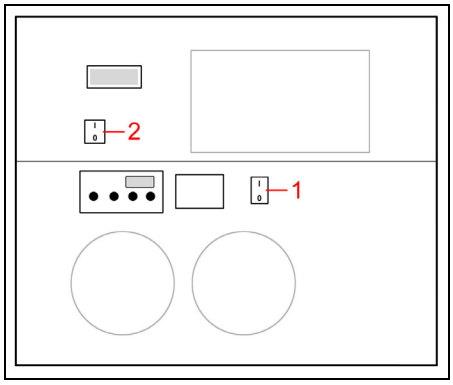

Figure 67: Cooling and supply unit for the "InSight DeepSee" infrared laser

3. If you are using a fluorescence lamp EL6000, switch it on first.

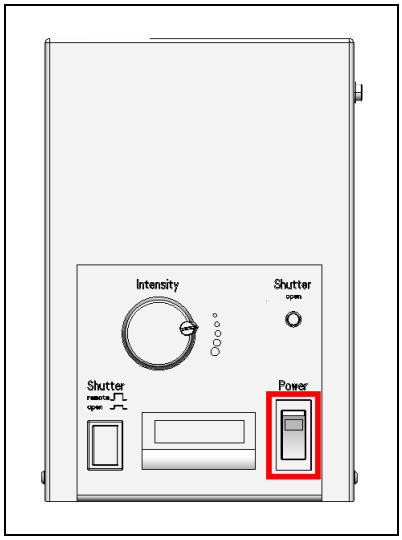

Figure 68: EL6000

4. If you are using a HyD RLD, switch it on at its supply unit. You can find additional information on the HyD RLD in **Chapter 12.3**.

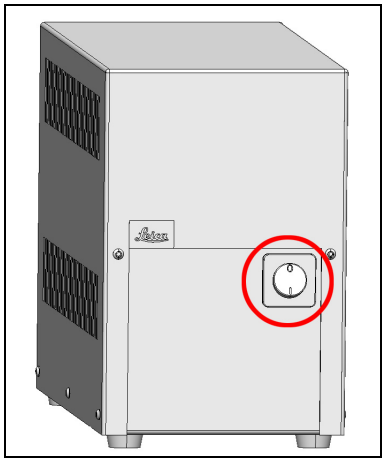

Figure 69: HyD RLD supply unit

5. Switch on the workstation. The operating system starts automatically. Wait until the startup process has concluded.
6. Turn on the microscope by actuating the electronics box toggle switch (**Figure 70, item 2**). The microscope is operating once the readiness indicator (**Figure 70, item 1**) on the toggle switch is lit up.

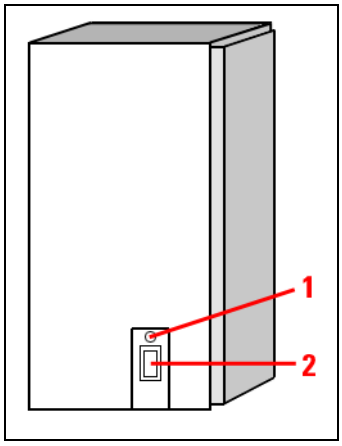

Figure 70: Microscope electronics box

7. Switch on the microscope's control panel:

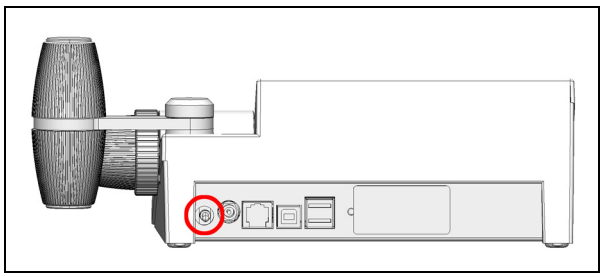

Figure 71: Control panel for the microscope

8. If your system has an infrared laser (MP) or an optical parametric oscillator (OPO), switch on the NDD detection unit:

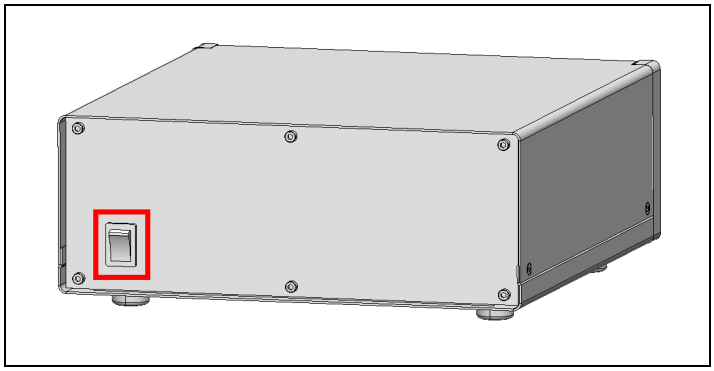

Figure 72: Switch on the NDD detection unit

9. Switch on the scan head on the front side of the compact supply unit (see **Figure 73, item 1**).

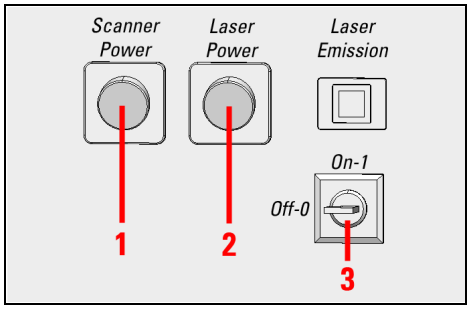

Figure 73: Overview of the Control Panel Field on the Compact Supply Unit

10. Switch on the lasers on the front side of the compact supply unit (see **Figure 73, item 2**).

The system's power supplies and fans are started.

11. If your system has an infrared laser (MP) or an optical parametric oscillator (OPO), switch on these components as described in the manufacturer's respective user manual.
12. To switch on the laser in the supply unit, press the key switch on the front side of the compact supply unit (see **Figure 73, item 3**).

WARNING **Risk of permanent eye and skin damage from laser radiation**

From this time on, laser radiation may be present in the specimen area of the laser scanning microscope. Make sure to follow the safety notes for operation of the system.

13. If you are using external 355 nm UV laser including 405 nm wavelength, make sure that the power switch is in the "On" position.

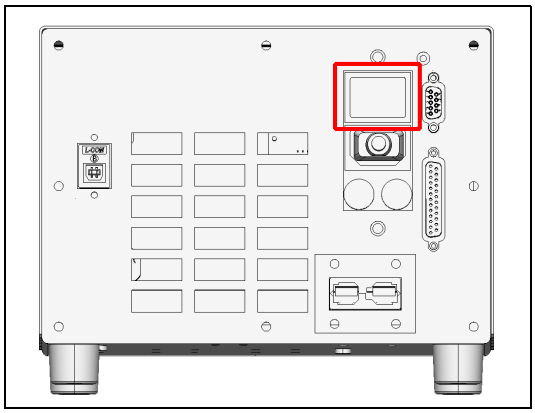

Figure 74: Power switch on external 355 nm UV laser

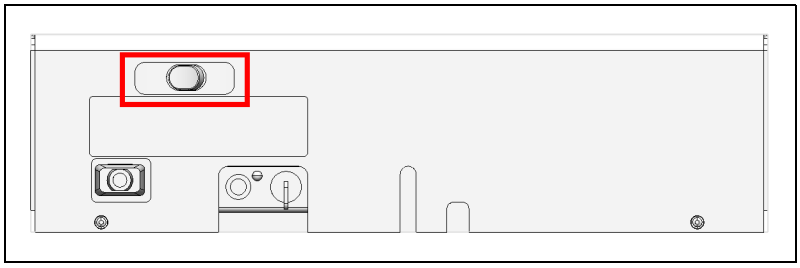

Figure 75: **Power switch on external 405 nm UV laser**

14. Activate the following key switches to switch on the external 355 nm UV laser including 405 nm:

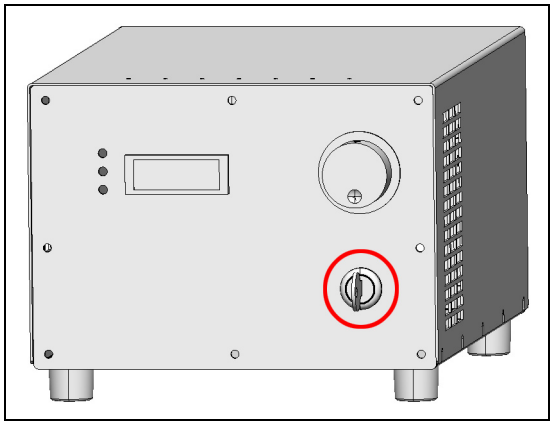

Figure 76: **Key switch on the power supply of external 355 nm UV laser**

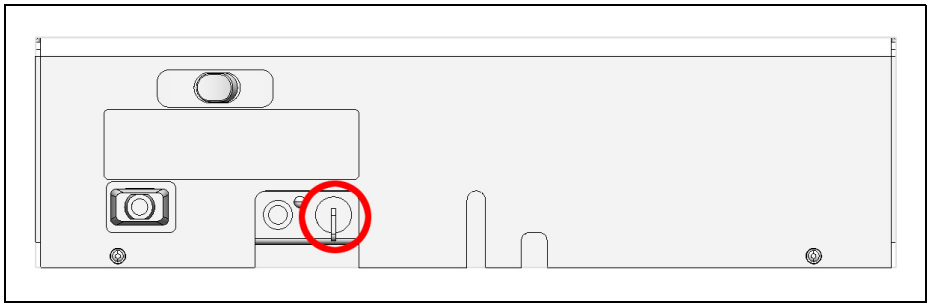

Figure 77: **Key switch on the external 405 nm UV laser**

15. After the workstation has started, log on to the operating system.

Using a personalized user ID

Use your personal user ID if one has been set up. This ensures that user-specific settings are saved and maintained for this user only. If the system administrator has not yet assigned a personal user ID, log on as "TCS_User". The default password is "True!Confocal55".

Change password

After logging on with your own user ID, you may change your password. To do so, press the **Ctrl**, **Alt** and **Del** keys at the same time.
Then, click **Change password**. The **Change password** dialog box opens.

Now you can start the LAS AF software.

12.3 HyD Reflected Light Detectors (HyD RLDs)

If you are using HyD RLDs you have to switch them on before LAS AF starts. Otherwise, the LAS AF software cannot initialize the detectors. The HyD RLDs consist of a supply unit (see **Figure 78**) and a detector module (see **Figure 79**).

- The power switch for switching on and off the power supply and the cooling for the detector module is located on the front side of the supply unit (see **Figure 78**).
- For image acquisition, activate the detectors in LAS AF. The yellow status LED (see **Figure 79, item 2**) flashes if photons are being detected.

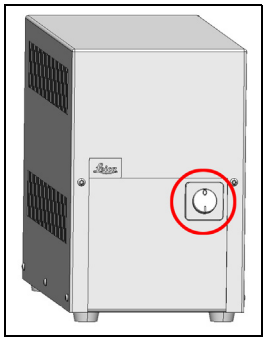

Figure 78: HyD RLD supply unit

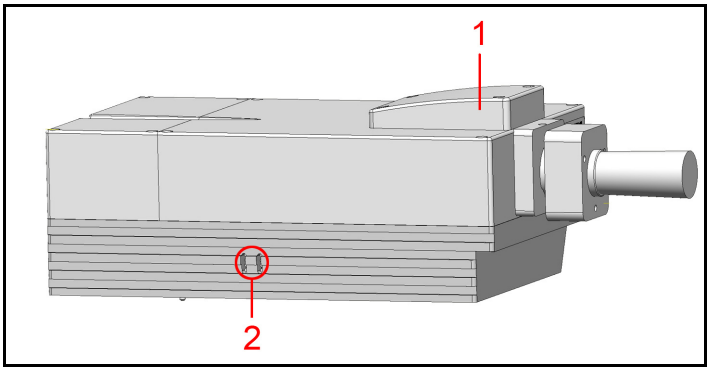

Figure 79: **HyD reflected light detectors (HyD RLDs)**

Status LED color (see Figure 79, item 2)	**Meaning**
Green	Operational readiness
Red	The maximum permitted signal level was exceeded. The detector was shut off.
Yellow	Flashes if photons are being detected.
Blue	Cooling is active.

- Never change or remove the filter cube or short pass filter during operation.
- The filter cube cover (see **Figure 79, item 2**) ensures the housing's EMC stability and prevents light from entering or exiting.

Replacement of the short pass filter is only allowed starting from LAS AF Version 2.7 or later.

13 LAS AF

The LAS AF software is used to control all system functions and acts as the link to the individual hardware components. Image acquisition, image analysis and image processing are carried out using LAS AF.

13.1 Starting LAS AF

NOTICE	**Damage is possible when contacting the specimen stage** When using an inverted microscope, the illuminator arm must be swung back before the system start and LAS AF start because the stage can damage the condenser, the objective or the specimen during initialization.

NOTICE	**Objective damage is possible when contacting the specimen stage** When using an upright microscope, the specimen stage must be moved down before the system start and LAS AF start because it could come into contact with the objective during initialization and damage the objective.

1. Click the LAS AF symbol on the desktop to start the software.
2. Select whether the system is to be operated in resonant (**Resonant: On**) or conventional mode (**Resonant: Off**).

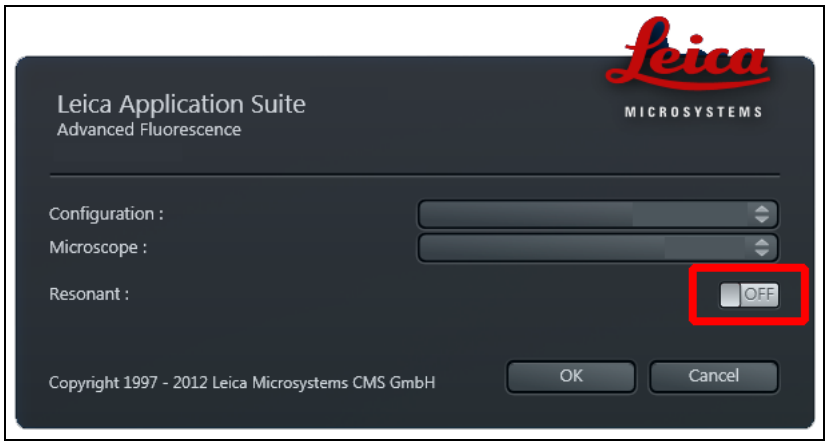

Figure 80: **Selection of resonant or conventional mode**

LAS AF saves the settings for **Configuration**, **Microscope** and **Resonant** as they were set the last time the software was started.

3. Now start LAS AF by clicking the **OK** button.

You are now in the main LAS AF view.

13.2 Structure of the Graphical User Interface

Figure 81: Structure of the Graphical User Interface

1 Scaling range
2 Operating mode selection
3 Steps
4 Menu
5 Tab area
6 Working area
7 Image display
7a Image display settings
7b Image processing and image analysis options
7c Channel display
8 Image acquisition buttons

Scaling range:
Using the slider, you can modify the (size) display of the user interface. On the right next to the slider, there is a reset button which you can use to reset the scaling to the default setting.

Operating mode selection:
Here you can set the operating mode you would like to use for image acquisition and analysis independently of your system configuration.

Steps:
Various steps are available depending on the selected operating mode. The TCS SP8 base module has the following four steps: **Configuration, Acquire, Process, Quantify.**

Menu:
The **File** and **Help dropdown menus are located here.**

Tab area:
The displayed tabs depend on the selected step. In the TCS SP8's basic operating mode, the following tabs are assigned to the steps:

- **Acquire** step:
  Experiments tab: Directory tree for opened files
  Acquisition tab: Hardware settings for the current experiment and parameter settings for image acquisition
- **Process** step:
  Experiments tab: Directory tree for opened files
  Process Tools tab: Overview of the functions available in this step
- **Quantify** step:
  Experiments tab: Directory tree for opened files
  Tools tab: Overview of the functions available in this step

Working area:
Depending on the step and tab selected, different dialogs are available in the working area:

- **Acquire** step:
  Beam Path Settings: In this dialog, the beam path is shown schematically. You can select and adjust the lasers and the system components along the beam path and the detectors for image acquisition.
- **Process** step:
  Appropriate processing options and a preview image appear in the working area based on which function you have selected in the **Process Tools** tab.
- **Quantify** step:
  The working area is divided into two tabs:
  Graphs: Graphic representation of values that were measured in the entire image or in regions of interest (ROI)
  Statistics: Display of statistical values that were determined in the entire image or in plotted regions of interest (ROI)

Image display:
Acquired images can be displayed and regions of interest (ROI) and additional information can be plotted here.

Image display settings:
This area contains buttons used to change the display options for acquired images (such as color).

Image processing and image analysis options:
This area contains buttons that can be used to add information to the image, such as text, arrows or dimensions. In addition, there is a button that enables regions of interest (ROI) to be plotted in the image display.

Channel display:
Here, you can select how the acquired image is to be displayed. If you have excited your specimen with multiple laser lines, you can use the buttons to select whether the different channels are displayed individually, next to each other or in one image.

Image acquisition buttons:
These buttons are available to you during the **Acquire** and **Quantify** steps. Here you can select how the acquisition is to be started:

- **Autofocus:** Focusing using the selected settings
- **Live:** Acquisition of a live image
- **Capture Image:** Acquisition of an individual image
- **Start:** Series of acquisitions using the selected settings

The software's "experiment concept" allows logically interconnected data to be managed together. The **Experiments** tab is displayed in a tree structure in different steps. Experiments are managed there.

Figure 82: **View of the Experiments tab**

Experiments have an export function for opening images and animations in an external application. The following selection of export formats is available if you select an experiment by right-clicking it:

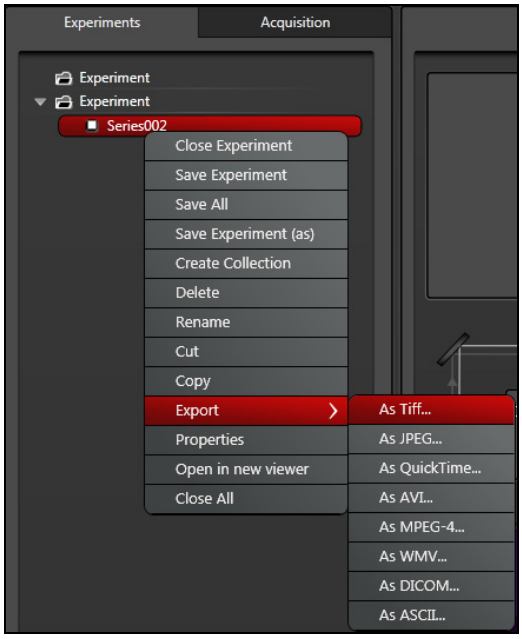

Figure 83: **Possible export formats**

13.3 LAS AF Online Help

13.3.1 Structure of Online Help

Online Help is divided into seven main chapters:

- **General Information**:
  Contains legal notices and general information on LAS AF.
- **About LAS AF Online Help**:
  Contains general information for the LAS AF Online Help.
- **LAS AF Steps**:
  Contains detailed dialog descriptions for the user interface in LAS AF steps.
- **LAS AF Application Wizards**:
  Contains detailed dialog descriptions for the user interface in LAS AF application wizards and extensive documentation for the MatrixScreener wizard.
- **LAS AF Advanced Time Lapse Modes**:
  Contains detailed dialog descriptions for the user interface in live data mode and in ElectroPhysiology operating mode.
- **LAS AF Express View**:
  Contains a detailed description of the LAS AF express view file browser.
- **Additional Information**:
  Contains background information on topics related to LAS AF, applications and systems, such as digital image processing, dye separation and objective accessories.

13.3.2 Accessing Online Help

In the menu bar, click on the **Help** menu. The menu drops down and reveals search-related options, including the following:

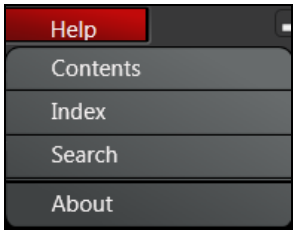

Figure 84: Online help menu

- **Contents**: Opens the table of contents for Online Help.
- **Index**: Opens the index for Online Help.
- **Search**: Opens the full-text search function for Online Help.
- **About**: Calls up the **User Configuration** dialog.

13.3.3 Selecting the Language for Online Help

By default, English is set as the language for Online Help. In order to select another language, follow these steps:

1. In LAS AF, switch to the **Configuration** step.
2. Click on the **User Config** button on the left side to access the **User Configuration** dialog.
3. In the **User Configuration** dialog, select the desired language under **Help Language**.

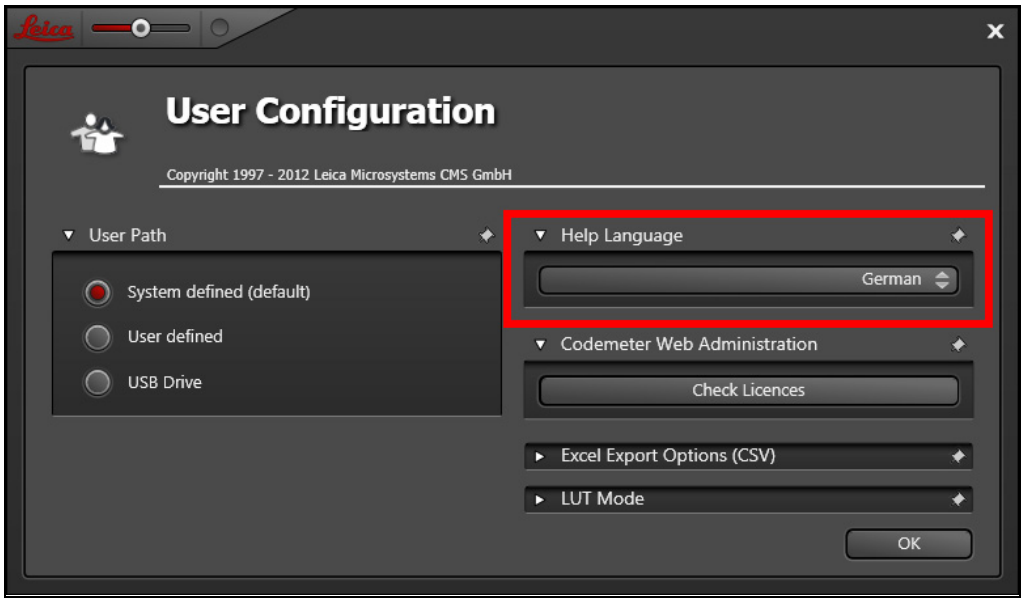

Figure 85: Selecting the language for Online Help

The next time you call up Online Help, the help topics will be displayed in the selected language.

The **Help** menu provides a second option for changing the language. Call up the **Help -> About** menu. The **User Configuration** dialog opens and you can select the desired language (see **Figure 85**).

13.3.4 Using Online Help

A navigation window is on the left side of the screen in the LAS AF Online Help. It contains three tabs that allow the contents of Online Help to be retrieved in different ways.

- **Contents** tab:
  Contains the table of contents in the form of a directory tree that can be expanded or collapsed. Double-click an entry in the table of contents to display the corresponding information.
- **Index** tab:
  Displays all keywords alphabetically and hierarchically. Double-click on an index entry to display the corresponding information or press the **Display** button.
  You can also search by keyword: Enter the word you would like to search for in the search box. Online help displays the keyword that is the closest match to the specified word.

- **Search** tab:
  Allows full-text searching. Enter the word you would like to search for in the search box. Click on the **List Topics** button. An alphabetically structured list of topics containing the keyword is displayed.

13.3.5 Full-text Search with Logically Connected Search Terms

In Online Help, you can use the full-text search function to search for words and for phrases enclosed in quotation marks. You can also use placeholders when searching (such as * or ?).

You can run a full-text search using logical operators (such as boolean operators) in order to link search terms and thereby increase the accuracy of search results. In the input field on Online Help's **Search** tab, directly input the desired logical operator together with the search terms. The following logical operators are available:

- Excitation **AND** Wavelength:
  Finds help topics that contain both the word "excitation" and the word "wavelength".
- Excitation **OR** Wavelength:
  Finds help topics that contain either the word "excitation" or the word "wavelength" or both.
- Excitation **NEAR** Wavelength:
  Finds help topics where the word "excitation" and the word "wavelength" are located within a specific search radius. This method also looks for words that are similar in spelling to the words specified in the phrase.
- Excitation **NOT** Wavelength:
  Finds help topics that contain the word "excitation" and not the word "wavelength".

14 Changing the Specimen

WARNING **Risk of permanent eye damage from laser radiation**

Never change specimens during the scanning operation because laser radiation can escape uncontrolled from the specimen area.

14.1 Changing the Specimen on an Upright Microscope

To change specimens on an upright microscope, proceed as follows:

1. Finish the scanning operation.
2. Ensure that no laser radiation exists in the specimen area.
3. Replace the specimen. Insert the specimen correctly into the specimen holder.

14.2 Changing the Specimen on an Inverted Microscope

To change specimens on an inverted microscope, proceed as follows:

1. Finish the scanning operation.
2. Ensure that no laser radiation exists in the specimen area.
3. Tilt the transmitted light arm back.
4. Replace the specimen. Insert the specimen correctly into the specimen holder.
5. Tilt the transmitted light arm back into the working position.

15 Changing the Objective

WARNING **Risk of permanent eye and skin damage from laser radiation**

Never change objectives during the scanning operation because laser radiation can escape uncontrolled from the specimen area.

To change objectives proceed as follows:

1. Finish the scanning operation.
2. Switch off the internal lasers using the detachable-key switch.
3. If any external lasers are present, switch them off with their detachable-key switch or as described in the laser manufacturer's user manual.
4. Rotate the objective nosepiece so that the objective to be changed is swiveled out of the beam path and points outward.
5. Exchange the objective.
6. Close all unoccupied positions in the objective nosepiece using the supplied caps. System operation with unlocked positions in the objective nosepiece is not allowed.

WARNING **Risk of permanent eye and skin damage from laser radiation**

All non-occupied positions in the objective nosepiece must be closed with the caps provided in order to prevent the uncontrolled escape of laser radiation in the specimen area.

16 Piezo Focus on Upright Microscope

If there is a piezo focus installed on your system (see **Figure 86**) pay careful attention to the following notes:

- Make sure that the specimen carrier is not against the objective and cannot be damaged by it or cause broken glass. The objective could likewise be damaged.
- Before switching the system on or launching the LAS AF software, ensure that there is no slide or specimen on the stage and that the specimen stage is in its lowest possible position. If this is not observed, specimens and objectives can be damaged or destroyed upon system/software startup by the initialization of the piezo focus.
- Do not carry out the objective change automatically. The automatic motion may damage the cable of the piezo focus.
- Do not make any adjustments to the piezo focus controller (see **Figure 87**), as it has already been optimally set up by Leica Service.
- When replacing the objective on the piezo focus, you must perform a teach-in for the new objective in LAS. Please see the instructions on this topic in the microscope operating manual.
- Please note that the focus position of an objective with piezo focus is 13 mm lower than those without piezo focus. In order to guarantee the same focal plane, a spacer is installed on all other objectives (see **Figure 88**).

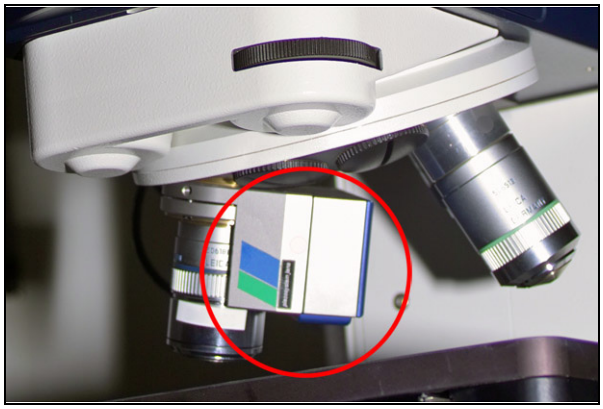

Figure 86: Piezo focus on objective nosepiece

The objective can be moved by 150 µm in either direction. The total travel is 300 µm.

Piezo focus controller display:

- Highest position: 350 µm
- Middle position: 200 µm
- Lowest position: 50 µm
- xz scan range: 250 µm

Figure 87: **Piezo focus controller**

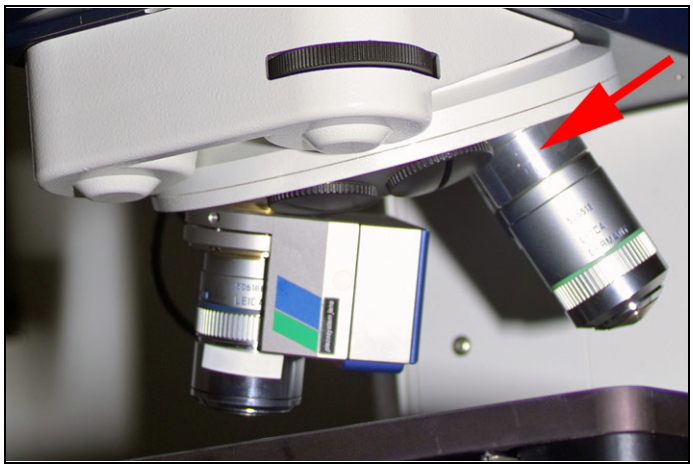

Figure 88: **Spacer on objective**

17 Switching Off the System

The TCS SP8 and TCS SP8 MP systems are available with a flexible or compact supply unit. Observe the switch-off sequence that applies to your supply unit.

NOTICE	**Damage to the instrument when not adhering to the switch-off sequence** The switch-off sequence must be followed! When not adhering to the below listed switch-off sequence, the laser can be damaged.

17.1 TCS SP8/SP8 X with Flexible Supply Unit

Observe the user manuals for external lasers

Please refer to the information from the documents provided by the laser manufacturer for the external lasers. Pay particular attention to the laser manufacturer's notes!

1. Save the image data: To do so, click on the **Experiments** tab and click the **Save all** button.

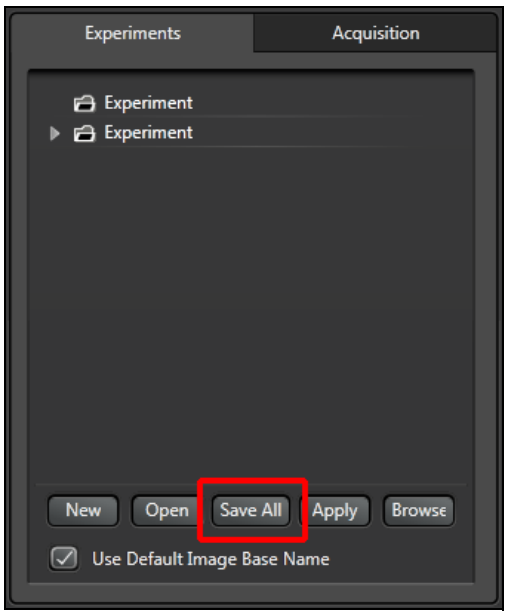

Figure 89: Saving the image data in LAS AF

2. You can shift the infrared laser, e.g. "InSight DeepSee" into a type of sleep mode without switching off the supply unit and cooling for the IR laser. This allows hours of acclimatization to be avoided later. To do so, click on **Configuration** -> **Laser Config MP-Laser** in LAS AF and deactivate the infrared laser in the **Currently Available Lasers** window. Switch on the supply unit and cooling for the laser.

   If you have no need for the "InSight DeepSee" infrared laser for a longer period of time, you can shut it off completely. To shut the "InSight DeepSee" off completely, call up the MP dialog (see **Figure 90, item 1**) and then click on the button **Laser shutdown** (**Figure 90, item 2**). In this case you have to deactivate the supply unit for the infrared laser (**Figure 91, item 1**) as well. After 15 minutes, you can also switch off the cooling for the infrared laser (**Figure 91, item 2**).

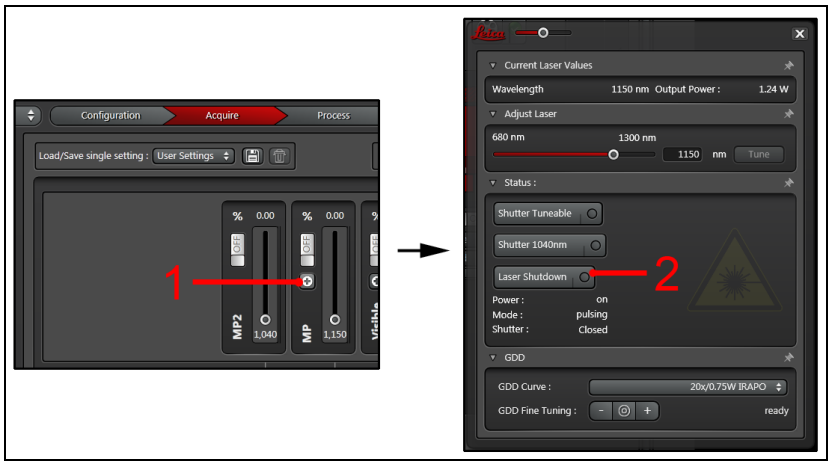

Figure 90: **Laser shutdown for switching off the "InSight DeepSee laser"**

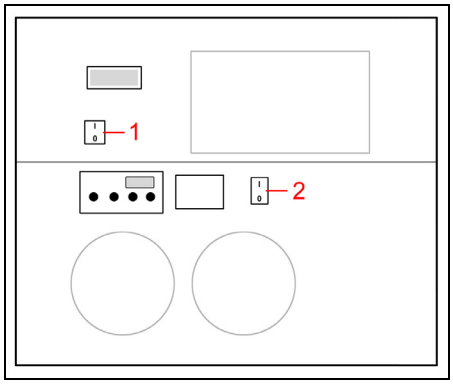

Figure 91: **Cooling and supply unit of the "InSight DeepSee" infrared laser**

3. If the argon laser is operating, you have to deactivate it before closing LAS AF in the laser configuration. Do not continue with the switch-off sequence until the argon laser ventilation has automatically shut off (after approx. 3 minutes).

NOTICE	**Damage to the instrument when not adhering to the switch-off sequence**
	If LAS AF is closed without deactivating the argon laser in the laser configuration, ventilation will not be shut off automatically. Never shut off the hardware components by means of the flexible or the compact supply unit before the shut-off argon laser has cooled down over the ventilation, since it can incur damage otherwise.

4. Close the LAS AF software: On the menu bar, select **File > Exit**.

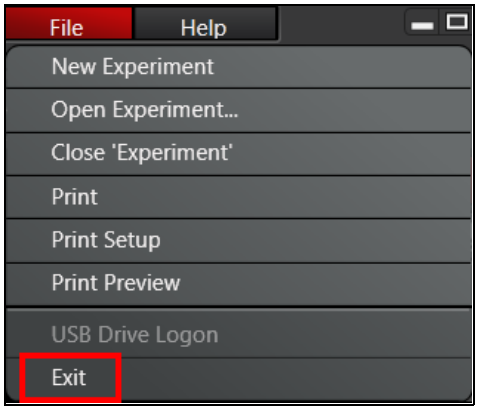

Figure 92: Shutting down LAS AF

5. Turn off the lasers in the supply unit with the key switch on the main switch board of the flexible supply unit (see **Figure 93, item 4**).

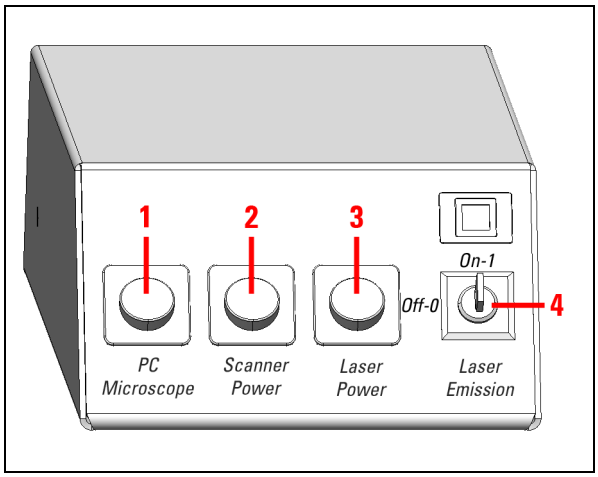

Figure 93: Overview of the main switch board on the flexible supply unit

The emission warning indicator goes out.

6. If your system has a white light laser, check whether the emission warning indicator is lit. If the emission warning indicator on the front side of the white light laser is lit, press the key below it. This causes all internal white light laser components to shut off and the emission warning indicator to go out.

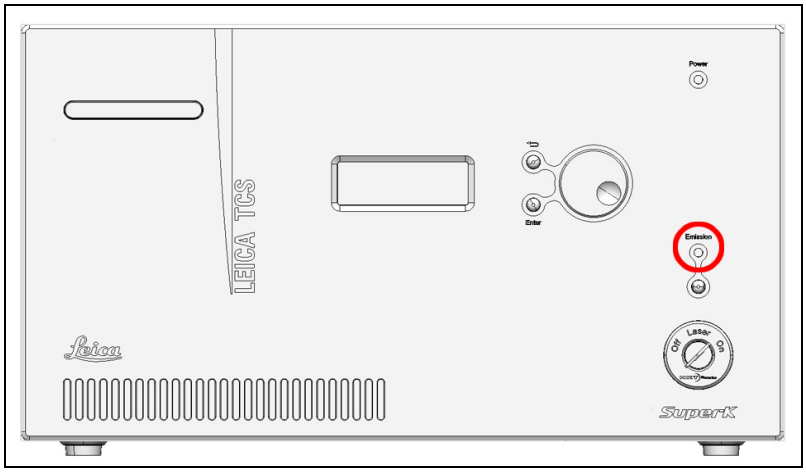

Figure 94: **Emission warning indicator on the white light laser**

7. Switch off the white light laser with the key switch on the front of the white light laser:

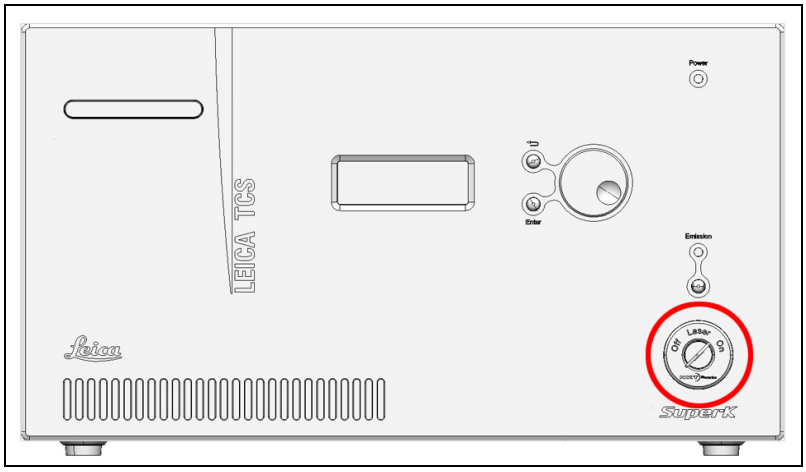

Figure 95: **Key switch for the white light laser**

8. If you are using external 355 nm UV laser including 405 nm wavelength, activate the following key switch to turn it off. The emission warning indicators go out.

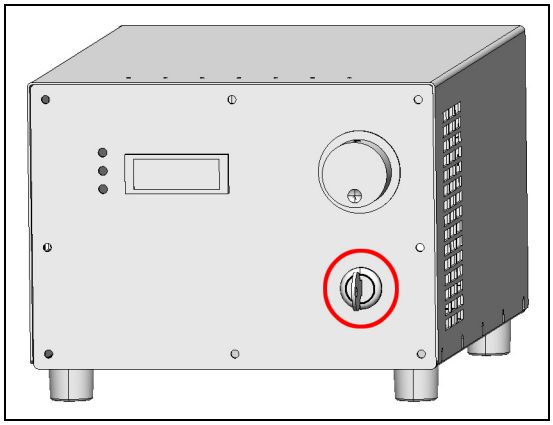

Figure 96: **Key switch on the power supply of external 355 nm UV laser**

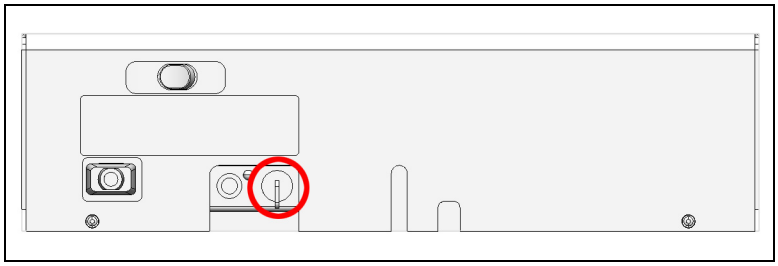

Figure 97: **Key switch on the external 405 nm UV laser**

9. Switch off both external 355 nm and 405 nm UV laser main power switches.

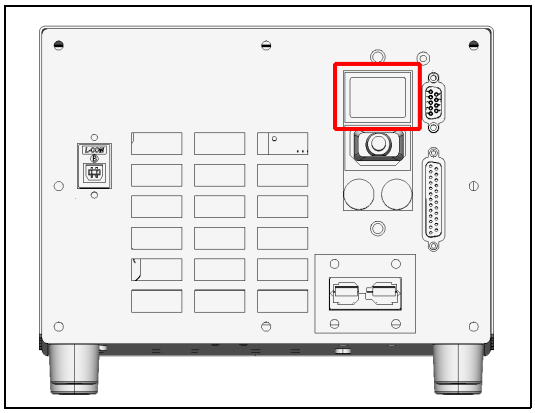

Figure 98: **Power switch on external 355 nm UV laser**

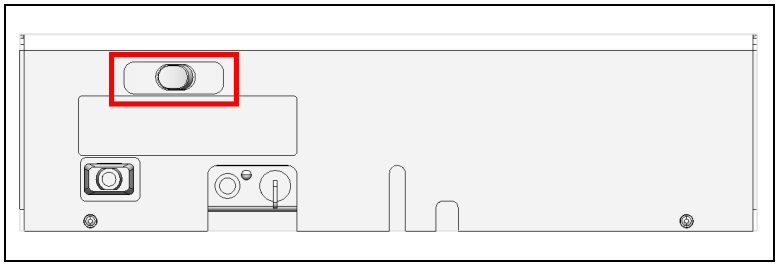

Figure 99: **Power switch on external 405 nm UV laser**

10. If you are using a HyD RLD, switch it off at its supply unit:

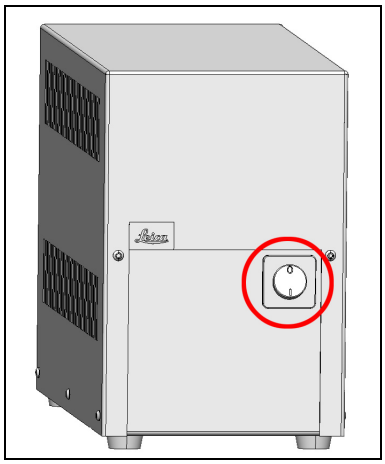

Figure 100: **HyD RLD supply unit**

11. If your system has an infrared laser (MP) or an optical parametric oscillator (OPO), switch off the NDD detection unit:

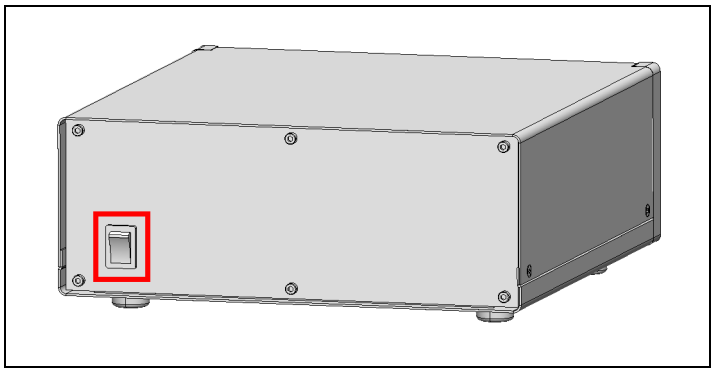

Figure 101: NDD detection unit

12. Switch off the microscope's control panel:

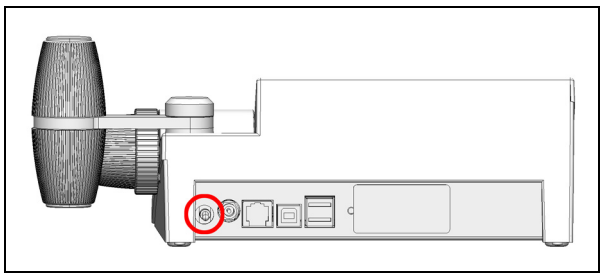

Figure 102: Control panel for the microscope

13. Now, shut down the workstation.
14. Switch off the lasers (see **Figure 93, item 3**), the scan head (see **Figure 93, item 2**), the workstation and the microscope (see **Figure 93, item 1**) on the flexible supply unit's main switch board.
15. Turn off any accessories being used.

Observe the user manuals for external lasers

Please refer to the information from the documents provided by the laser manufacturer for the external lasers. Pay particular attention to the laser manufacturer's notes!

17.2 TCS SP8 with Compact Supply Unit

Observe the user manuals for external lasers

Please refer to the information from the documents provided by the laser manufacturer for the external lasers. Pay particular attention to the laser manufacturer's notes!

1. Save the image data: Select the "Experiments" tab and click the **Save all** button.

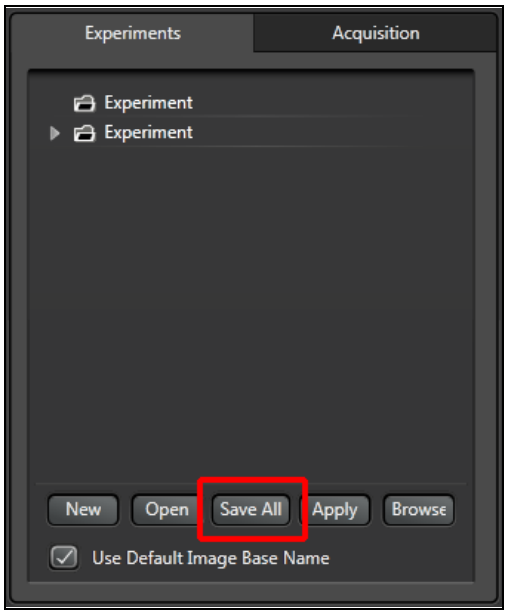

Figure 103: Saving the image data in LAS AF

2. You can shift the infrared laser, e.g. "InSight DeepSee" into a type of sleep mode without switching off the supply unit and cooling for the IR laser. This allows hours of acclimatization to be avoided later. To do so, click on **Configuration** -> **Laser Config MP-Laser** in LAS AF and deactivate the infrared laser in the **Currently Available Lasers** window. Switch on the supply unit and cooling for the laser.

   If you have no need for the "InSight DeepSee" infrared laser for a longer period of time, you can shut it off completely. To shut the "InSight DeepSee" off completely, call up the MP dialog (see **Figure 104, item 1**) and then click on the button **Laser shutdown** (**Figure 104, item 2**). In this case you have to deactivate the supply unit for the infrared laser (**Figure 105, item 1**) as well. After 15 minutes, you can also switch off the cooling for the infrared laser (**Figure 105, item 2**).

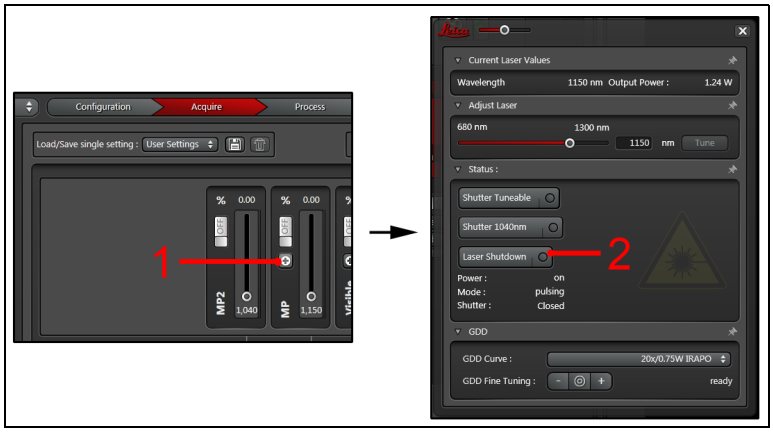

Figure 104: **Laser shutdown button for switching off the "InSight DeepSee laser"**

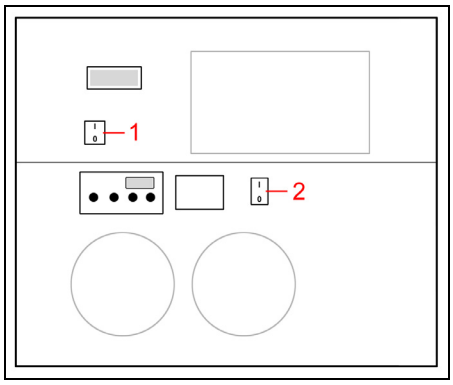

Figure 105: **Cooling and supply unit for the "InSight DeepSee" infrared laser**

3. If the argon laser is operating, you have to deactivate it before closing LAS AF in the laser configuration. Do not continue with the switch-off sequence until the argon laser ventilation has automatically shut off (after approx. 3 minutes).

NOTICE	**Damage to the instrument when not adhering to the switch-off sequence** If LAS AF is closed without deactivating the argon laser in the laser configuration, ventilation will not be shut off automatically. Never shut off the hardware components by means of the flexible or the compact supply unit before the shut-off argon laser has cooled down over the ventilation, since it can incur damage otherwise.

4. Close the LAS AF software: On the menu bar, select **File > Exit**.

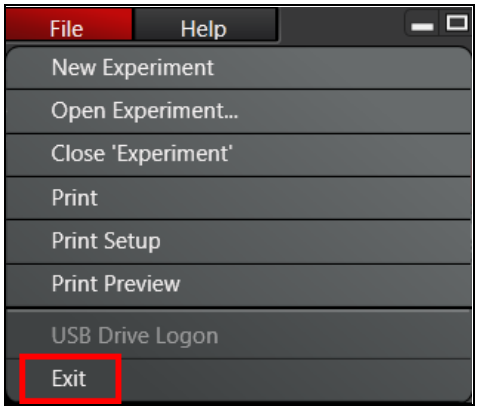

Figure 106: Shutting down LAS AF

5. Turn off the lasers in the supply unit with the key switch on the front side of the compact supply unit (see **Figure 107, item 3**).

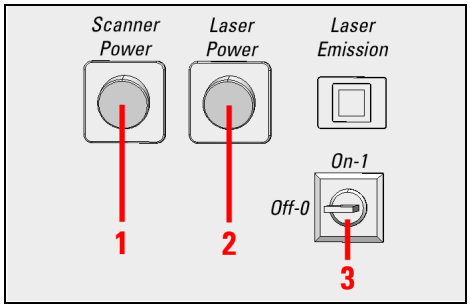

Figure 107: Overview of the Control Panel Field on the Compact Supply Unit

The emission warning indicator goes out.

6. If you are using a HyD RLD, switch it off at its supply unit:

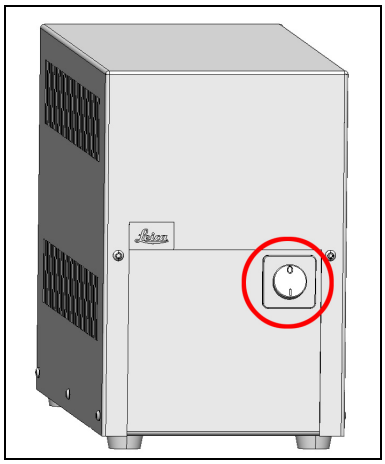

Figure 108: HyD RLD supply unit

7. If your system has an infrared laser (MP) or an optical parametric oscillator (OPO), switch off the NDD detection unit:

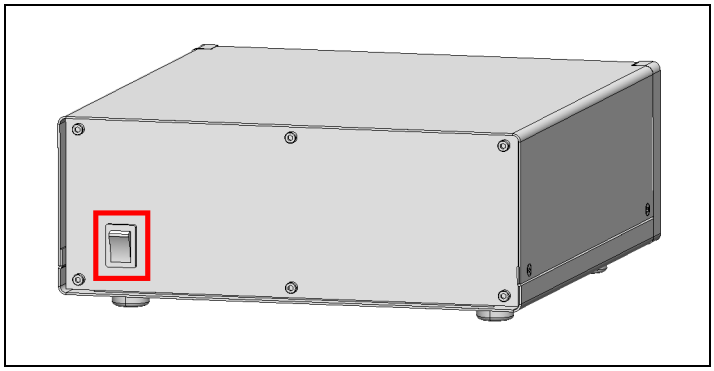

Figure 109: NDD detection unit

8. Switch off the microscope's control panel:

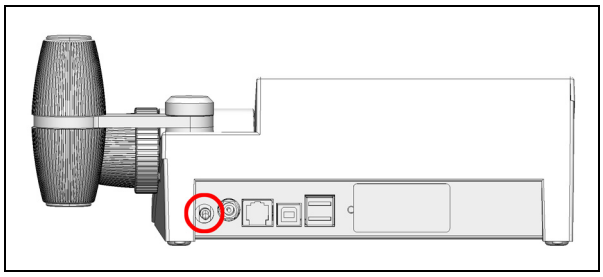

Figure 110: Control panel for the microscope

9. Now, shut down the workstation.
10. Switch off the lasers (see **Figure 107, item 2**) and the scan head (see **Figure 107, item 1**) on the front side of the compact supply unit.

11. Turn off the microscope by actuating the electronics box toggle switch (**Figure 111, item 2**). The readiness indicator (**Figure 111, item 1**) on the electronics box goes out.

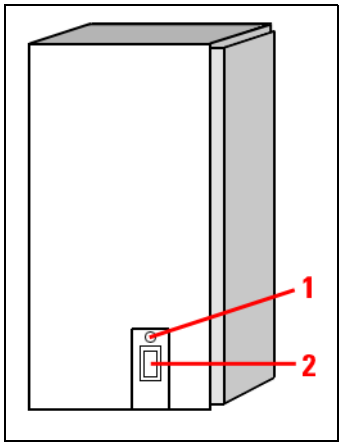

Figure 111: Microscope electronics box

12. Turn off any accessories being used.
13. If you are using external 355 nm UV laser including 405 nm wavelength, activate the following key switch to turn it off. The emission warning indicators go out.

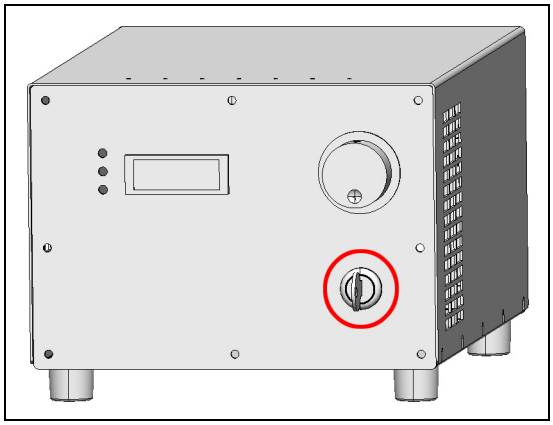

Figure 112: Key switch on the power supply of external 355 nm UV laser

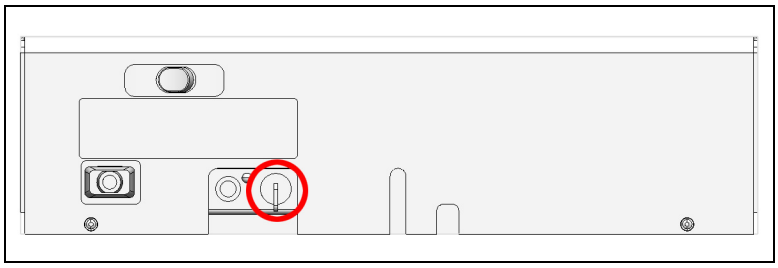

Figure 113: Key switch on the external 405 nm UV laser

14. Switch off both external 355 nm and 405 nm UV laser main power switches.

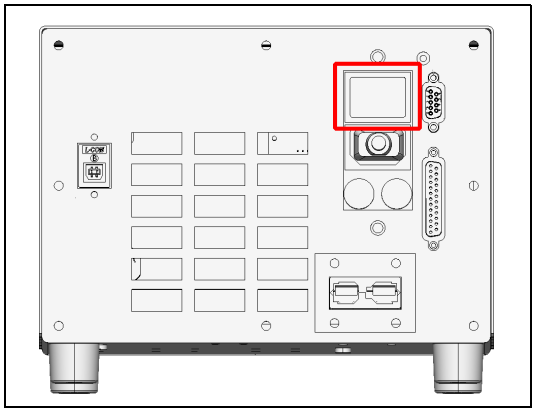

Figure 114: **Power switch on external 355 nm UV laser**

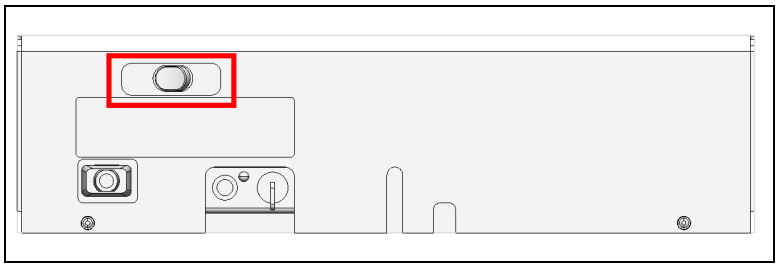

Figure 115: **Power switch on external 405 nm UV laser**

Observe the user manuals for external lasers

Please refer to the information from the documents provided by the laser manufacturer for the external lasers. Pay particular attention to the laser manufacturer's notes!

18 Care and Cleaning

Observe the user manuals provided

Always observe all of the user manuals provided for the individual components and peripheral devices.

WARNING **Electric shock**

Before cleaning, disconnect the entire system from the power supply. To do so, use the power switches of all components and disconnect all power cables from the power supply.

Ensure that no fluids enter the individual components or peripheral devices during cleaning!

18.1 Cleaning Surfaces

- Never use abrasives. Abrasives can scratch the surface and thus have a negative effect on the protection of the parts.
- Remove dust and loose dirt particles using a soft brush or lint-free cotton cloth.
- You may clean uncoated or plastic surfaces only using a dry cotton cloth or one moistened with a little water. Other cleaning agents can attack and tarnish the surface and cause it to become porous.
- Carefully remove clinging dirt on coated surfaces using a clean cloth slightly moistened with water.
- Never use acetone, xylene or nitro thinners as they attack the varnish.

18.2 Cleaning the Optical System

- Never open the objectives for cleaning.
- Remove dust with a fine, dry brush made from hair or with a clean, lint-free cloth moistened with distilled water.
- Prevent the optics and mechanical parts from coming into direct contact with acids, bases and other aggressive chemicals.
- Remove persistent dirt from glass surfaces using pure alcohol or chloroform.

18.3 Cleaning Immersion Lenses

The immersion oil should be removed from oil immersion lenses immediately after it is applied:

1. First, remove the immersion oil using a clean cloth.
2. Once most of the oil has been removed with a clean tissue, a piece of lens tissue should be placed over the immersion end of the lens.
3. Apply a drop of the recommended solvent. Gently draw the tissue across the lens surface.
4. Repeat this procedure until the lens is completely clean. Use a clean piece of lens tissue each time.

Caution when objective lens is contaminated

If an objective lens is contaminated by unsuitable immersion oil or by the specimen, please contact your local Leica branch office. Certain solvents may dissolve the glue which holds the lens in place.

18.4 Care

- Always keep the optical components of the microscope clean.
- Never touch the optical components with your fingers or anything which may bear dust or grease.
- Always place dust caps over the objective nosepiece positions when no objective is in place in the nosepiece.
- When not in use, cover the system with a plastic cover or a clean piece of cotton cloth.

Avoid condensation

Allow the entire system to cool down to room temperature before covering the system with a dust cover. This prevents condensation from forming below it, which can enter the system and damage it.

19 Repairs and Service Work

WARNING **Contamination with hazardous substances**

Before each call from a service technician, the system has to be cleaned thoroughly to avoid contamination with hazardous biological materials. When returning system parts, it must be ensured that they are free of hazardous substances - otherwise they must not be sent. This applies in particular to systems that are located in biomedical research labs.

- Repairs and servicing may be performed only by service technicians authorized by Leica Microsystems CMS GmbH. Opening or working on the system in any way shall void any and all warranty claims.
- If housing parts have to be opened for repairs or service work, only Leica service technicians may be present in the room where the system is installed.
- Be sure to back up your data before any service or repair work is performed. Leica Microsystems CMS GmbH shall not be liable for any loss of data.
- Inside the system there are installed components that can cause potentially fatal injury if handled improperly. Opening these components will result in danger to people and the system. Therefore, only authorized Leica service personnel may open or work on the supply unit and the scan head.

20 Maintenance

NOTICE	**Damage to the instrument from not paying attention to the maintenance** Absolutely adhere to the prescribed maintenance intervals, as otherwise there can be serious damage to the instrument.

20.1 Having Coolant Replaced

The coolant (such as for scan head cooling and cooling the HyD RLD) must be replaced by Leica Service every two years.

You can find the safety data sheet for the coolant in the **Chapter "Appendix"**.

Maintenance and replacement of the coolant may only be carried out by service technicians who are authorized by Leica Microsystems CMS GmbH. Opening or working on the system in any way shall void any and all warranty claims.

WARNING	**Contamination with hazardous substances** Before each call from a service technician, the system has to be cleaned thoroughly to avoid contamination with hazardous biological materials. When returning system parts, it must be ensured that they are free of hazardous substances - otherwise they must not be sent. This applies in particular to systems that are located in biomedical research labs.

21 Disassembly and Transport

Do not disassemble system components or housing parts yourself. Opening or working on the system in any way shall void any and all warranty claims.

Contact the Leica branch office in your country or your contact person if you need to move or transport the system or need to ship parts of it.

WARNING	**Contamination with hazardous substances** Before each call from a service technician, the system has to be cleaned thoroughly to avoid contamination with hazardous biological materials. When returning system parts, it must be ensured that they are free of hazardous substances - otherwise they must not be sent. This applies in particular to systems that are located in biomedical research labs.

Follow the notes provided in **Chapter "Repairs and Service Work"**.

22 Disposal

At the end of the product service life, please contact the Leica branch office in your country with regard to disposal.

Disposal

The system, its accessory components and consumable materials must not be disposed of together with general household waste! Be sure to follow the national laws and regulations.

23 Contact

If you have any further questions, please directly contact your country's Leica branch office or your local contact person. The appropriate contacts can be found on the Internet under:

http://www.confocal-microscopy.com

24 Appendix

24.1 Patents

The Leica TCS SP8 product is protected by US patents:

5,886,784; 5,903,688; 6,137,627; 6,222,961; 6,285,019; 6,311,574; 6,355,919; 6,423,960; 6,433,814; 6,444,971; 6,466,381; 6,510,001; 6,614,031; 6,614,525; 6,614,526; 6,654,165; 6,657,187; 6,677,579; 6,678,443; 6,687,035; 6,738,190; 6,754,003; 6,771,405; 6,801,359; 6,831,780; 6,850,358; 6,852,964; 6,867,899; 7,016,101.

Further patents are pending.

The Leica TCS SP8 X product is protected by US patents:

5,886,784; 5,903,688; 6,137,627; 6,222,961; 6,285,019; 6,311,574; 6,355,919; 6,423,960; 6,433,814; 6,444,971; 6,466,381; 6,510,001; 6,611,643; 6,614,031; 6,614,525; 6,614,526; 6,654,165; 6,657,187; 6,677,579; 6,678,443; 6,687,035; 6,710,918; 6,738,190; 6,754,003; 6,771,405; 6,796,699; 6,801,359; 6,831,780; 6,850,358; 6,852,964; 6,867,899; 6,888,674; 6,898,367; 6,958,858; 7,016,101; 7,110,645; 7,123,408; 7,257,289; 7,679,822

Further patents are pending.

24.2 Safety Data Sheets from Third-Party Manufacturers

The scan head is liquid-cooled. Following are the safety data sheets from the manufacturer "Innovatek" for the coolant used.

EEC - SAFETY DATA SHEET
Gem. 91/155/EG; 2001/58/EG

innovatek

Dated:
February 28st 2011 / innovatek Protect application mixture

innovatek OS GmbH
www.innovatek.de
info@innovatek.de

1. Substance/preparation and company name

Trade name: innovatekProtect IP – application mixture
company: innovatek OS GmbH, Stadtweg 9, 85134 Stammham
Tel: 08405/92590
Fax: 08405/925921
Emergency phone No.: +49 (0) 8405/92590

2. Composition / information on ingredients

Chemical nature: Ethylene glycol (ethane diol). Corrosion inhibitors.
Hazardous Compounds:

Ethanediol	Content (w/w): >25% +-5% EC No: 203-473-3 INDEX No: 603-027-00-1	CAS No: 107-21-1 Hazard symbol: Xn R-phrases: 22
2-ethylhexanoic acid, sodium salt	Content (w/w): 0,5 % - 0,75 % EC No: 243-283-8	CAS No: 19766-89-3 Hazard symbol: Xn R-phrases: 63

The wording of the hazard symbols and R-phrases is specified in Chapter 16 if dangerous ingredients are mentioned.

3. Hazard identification

Special risks for people and environment: Damages caused to someone´s health by swallowing.

4. First aid measures

General advice: Remove contaminated clothing.
If inhaled: If difficulties occur after vapour/aerosol has been inhaled: fresh air, summon physician.
On skin contact: Wash thoroughly with soap and water.
On contact with eyes: Wash affected eyes for at least 15 minutes under running water with eyelids held open.
On ingestion: Rinse mouth immediately and then drink plenty of water, seek medical attention.
Note to physician: Symptomatic treatment (decontamination, vital functions). Administer 50 ml of pure ethanol in a drinkable concentration.

5. Fire fighting measures

Suitable extinguishing media: Water spray, alcohol-resistant foam, dry extinguishers, carbon dioxide (CO_2).
Special protective equipment: In case of fire, wear a self contained breathing apparatus.
Further information: The degree of risk is governed by the burning substance and the fire conditions. Contaminated extinguishing water must be disposed of in accordance with local legislation.

1

Figure 116: innovatek Protect application mixture safety data sheet page 1

EEC - SAFETY DATA SHEET
Gem. 91/155/EG; 2001/58/EG

innovatek

Dated:
February 28st 2011 / innovatek Protect application mixture

innovatek OS GmbH
www.innovatek.de
info@innovatek.de

6. Accidental release measures

Personal precautions:	Avoid excessive contact with skin and eyes. In case of release of larger amounts remove contaminated clothing and wash body down thoroughly with water. Hand protection. Pick up immediately as product renders floors slippery.
Environmental precautions:	Contain contaminated water/firefighting water. Do not discharge product into natural waters without pretreatment (biological treatment plant).
Methods for cleaning up / taking up:	Bind the liquid by using suitable absorbent material (saw dust, sand, etc.) and dispose of in accordance with the regulations. Wash away spills thoroughly with large quantities of water. In case of release of larger quantities which might flow into the draining system or waters, contact appropriate authorities.

7. Handling and storage

Handling:	Ensure thorough ventilation of stores and work areas.
Protection against fire and explosion:	Take precautionary measures against static discharges. If exposed to fire, keep containers cool by spraying with water.
Storage:	Product is hygroscopic. Containers should be stored tightly sealed in a dry place. Storage in galvanized containers is not recommended.

8. Exposure controls and personal protection

Components with workplace control parameters:

107-21-1: Ethylene glycol	MAK value (D): 26 mg/m³ = 10 ppm (TRGS 900 (DE)). Top limit category 1. There is no reason to fear a risk of damage to the developing embryo when the MAK value is adhered to. Skin resorption hazard: wear suitable gloves (see below).
Personal protective equipment	
Respiratory Protection:	Do not inhale gases/vapours/aerosols.
Hand protection:	Chemical resistant protective gloves (EN 374). Recommended: nitrile rubber, protective index 6. Manufacturers directions for use should be observed because of great diversity of types.
Eye protection:	Safety glasses with side-shields (frame goggles, EN 166)
General safety and hygiene measures:	The usual precautions for the handling of chemicals must be observed.

9. Physical and chemical properties

Form:	Liquid
Colour:	Colourless
Odour:	Product specific
pH value (500 g/l, 20 °C):	7.0 - 9.0
Solidification temperature:	< -10 °C (DIN/ISO 3016)
Boiling point/range:	>= 105 °C (ASTM D 1120)
Flash point:	>120 °C (only valid für the Ethylenglykol part)(DIN/ISO 2592)
Lower explosion limit:	3.0 % vol. (only valid für the Ethylenglykol – part)

2

Figure 117: innovatek Protect application mixture safety data sheet page 2

EEC - SAFETY DATA SHEET
Gem. 91/155/EG; 2001/58/EG

innovatek

Dated:
February 28st 2011 / innovatek Protect application mixture

innovatek OS GmbH
www.innovatek.de
info@innovatek.de

Upper explosion limit:	15.0 % vol (only valid für the Ethylenglykol – part)
Ignition point:	>200°C (DIN 51794)(only valid für the Ethylenglykol – part)
Vapor pressure (20°C):	2 mbar (DIN 51757)
Density (20°C):	ca. 1.04 g/cm³
Miscibility with water:	optional mixable
Solubility (quantitative) solvent:	polar solvents: soluble
Viscosity (kinematic, 20°C):	3-5 mm²/s

10. Stability and reactivity

Substances to avoid:	Strong oxidizing agents.
Hazardous reactions:	No hazardous reactions when stored and handled according to instructions.
Hazardous decomposition products:	No hazardous decomposition products if stored and handled as prescribed/indicated.

11. Toxicological data

LD50/oral/rat: >2000 mg/kg (only valid für the Ethylenglykol – part)
LD50/dermal/rabbit: non- irritant (only valid für the Ethylenglykol – part)
Primary skin irritation/rabbit/: non-irritant

Information on Ethylene glycol:

Further information:	Developmental toxicity was observed after oral ingestion of high doses in studies with rats and mice, but this effect was not seen in a study with rabbits.
Experiences in humans:	Lethal dose if swallowed approx. 1.5 g/kg body weight. Lethal dose approx. 90-110 g for adults, and correspondingly less for children. Smaller doses can result in: consciousness is affected, kidney damage, damage to the central nervous system.
Additional information:	The statements are based on the properties of the individual components. There is no reason to fear a risk of damage to the developing embryo or fetus when the MAK value is adhered to.The whole of the information available provides no indication of a carcinogenic effect.

12. Ecological information

Ecotoxicity:	Toxicity to fish: Leuciscus idus/LC50 (96 h): >400 mg/l Aquatic invertebrates: daphnia magna/EC50 (48 h): >400 mg/l Aquatic plants: algae/EC50 (72 h): >400 mg/l Microorganisms/Effect on activated sludge: Inhibition of degradation activity in activated sludge is not to be anticipated during correct introduction of low concentrations.
Persistence and Degradability:	Elimination information: Test method: OECD 301A (new version) Method of analysis: DOC reduction Degree of elimination: >70 % Evaluation: readily biodegradable.
Additional information:	Other ecotoxicological advice: Do not release untreated into na-

3

Figure 118: innovatek Protect application mixture safety data sheet page 3

EEC - SAFETY DATA SHEET
Gem. 91/155/EG; 2001/58/EG

innovatek

innovatek OS GmbH
www.innovatek.de
info@innovatek.de

Dated:
February 28st 2011 / innovatek Protect application mixture

tural waters. The product has not been tested. The statement was derived from the properties of the individual components.

13. Disposal considerations

innovatekProtect must be dumped or incinerated in accordance with local regulations.

Contaminated packaging:	Uncontaminated packs can be reused. Packs that cannot be cleaned should be disposed of in the same manner as the contents.

14. Transport information

Not dangerous according to transport regulations
(ADR RID ADNR IMDG / GGVSee ICAO / IATA)

15. Regulatory information

Regulations of the European union (Labelling) / National legislation / Regulations:
Directive 1999/45/EEC („Preparation Directive“)

Hazard Symbol:	Xn:	Harmful
R-phrases:	22:	Harmful if swallowed
S-phrases:	2:	Keep out of reach of children
	24/25:	Avoid contact with skin and eyes
	46:	If swallowed, seek medical advice immediately and show this container or label

Hazard determinant component for labelling:	1,2-Ethanediol
Other regulations:	Classification according to VbF (Germany): None Categorization according to TA-Air (Germany)3.1.7 Category III Water compromises category (attachment 4 of VwVwS(Germany) from 17.Mai 1999): (1) low water compromising

16. Further Information

Full text of hazard symbols and R-phrases if mentioned as hazardous components in chapter 2:
Xn: Harmful
22: Harmful if swallowed.
63: Possible risk of harm to the unborn child.

Vertical lines in the left hand margin indicate an amendment from the previous version.
This safety data sheet is intended to provide information and recommendations as to: 1. how to handle chemical substances and preparations in accordance with the essential requirements of safety precautions and physical, toxicological, and ecological data. 2. how to handle, store, use, and transport them safely.
No liability for damage occured in connection with the use of this information or with the use, application, adaption, or processing of the products here described will be accepted. An exception will be made in the case that our legal representatives should come to be held re-

4

Figure 119: innovatek Protect application mixture safety data sheet page 4

EEC - SAFETY DATA SHEET
Gem. 91/155/EG; 2001/58/EG

innovatek

Dated:
February 28st 2011 / innovatek Protect application mixture

innovatek OS GmbH
www.innovatek.de
info@innovatek.de

sponsible and liable by reason of intent or gross negligence. No liability will be accepted for damage indirectly incured.
We provide this information and data according to our present level of knowledge and experience. No assurances concerning the characteristics of our product are hereby furnished.

5

Figure 120: innovatek Protect application mixture safety data sheet page 5

24.3 Compliance

This system has been tested and meets the requirements of the following standards:

IEC/EN 61010-1:2011	"Safety requirements for electrical equipment for measurement, control and laboratory use - Part 1: General requirements"
IEC/EN 60825-1:2007	"Safety of laser products - Part 1: Equipment classifications and requirements"
IEC/EN 61326-1:2006	"Electrical equipment for measurement, control and laboratory use - EMC requirements - Part 1: General requirements (class A)" This is a Class A instrument for use in buildings that do not include domestic premises and buildings not directly connected to a low-voltage power supply network that supplies buildings used for domestic purposes.

For use in the USA:

CDRH 21 CFR 1040.10:	Laser Products U.S. Food and Drug Administration (FDA) "Complies with FDA performance standards for laser products except for deviations pursuant to laser notice No. 50, dated June 24, 2007".

For the USA (area of validity of the CDRH/FDA), the designations of the laser class are to be changed in the text from 3B to IIIb and Class 4 to IV.

EC Declaration of Conformity

No.: CE 137-01

Leica MICROSYSTEMS

Manufacturer:	Leica Microsystems CMS GmbH
Address:	Am Friedensplatz 3 68165 Mannheim, Germany
Product:	**Confocal Laser Scanning Microscope** **TCS SP8 product family and accessories** **TCS SP8 X product family and accessories**

We declare that the product described herein complies with the following European Directives:

2004/108/EC Directive on Electromagnetic compatibility

2006/95/EC Directive on Low-voltage equipment

The product conforms to the standards:

EN 61326-1:2006
Electrical equipment for measurement, control and laboratory use - EMC requirements – Part 1: General requirements
Emission Class A

EN 61010-1: 2010
Safety requirements for electrical equipment for measurement, control and laboratory use - Part 1: General requirements

EN 60825-1: 2007
Safety of laser products
Part 1: Equipment classification and requirements

For the microscope models DM and DMI the respective EC Declaration of Conformity with its corresponding EC Directives is valid.

This declaration shall cease to be valid if modifications are made to the product without our approval.

Mannheim, Germany
May 30, 2012

.....
i.V. Steffen Laabs
Head of RA/QA

Figure 121: Declaration of Conformity

24.4 People's Republic of China

- Administrative Measures on the Control of Pollution Caused by Electronic Information Products -

部件名称 Name of the part	有毒有害物质或元素 Hazardous substances					
	铅 (Pb)	汞 (Hg)	镉 (Cd)	六价铬 (Cr^{6+})	多溴联苯 (PBB)	多溴二苯醚 (PBDE)
printed circuit boards	X	O	O	O	O	O
electronic components	X	O	O	O	O	O
mechanical parts	X	O	O	X	O	O
optical components	X	O	X	O	O	O
cables	O	O	O	O	X	X
light sources	X	X	O	O	O	O

o： 表示该有毒有害物质在该部件中的含量均在SJ/T 11363-2006 标准规定的限量要求以下。
Indicates that the concentration of the hazardous substance in all materials in the parts is below the relevant threshold of the SJ/T 11363-2006 standard.

x： 表示该有毒有害物质至少在该部件的某一材料中的含量超出SJ/T 11363-2006 标准规定的限量要求。
Indicates that the concentration of the hazardous substance of at least one of all materials in the parts is above the relevant threshold of the SJ/T 11363-2006 standard.

Note: The actual product may or may not include all the part types listed above.

www.leica-microsystems.com

Leica Microsystems CMS GmbH
Am Friedensplatz 3
D-68165 Mannheim (Germany)

Phone: +49 621 7028 - 0
Fax: +49 621 7028 - 1028
http://www.leica-microsystems.com

Copyright © Leica Microsystems CMS GmbH • All rights reserved

User manual Leica TCS SP8 | Leica TCS SP8 MP | Leica TCS SP8 X
Order No.: 158000002 | V: 01